GUARDIAN®

Guardian® Voyager Portable Ceiling Lift System

Model 98000

Installation & Instruction Manual

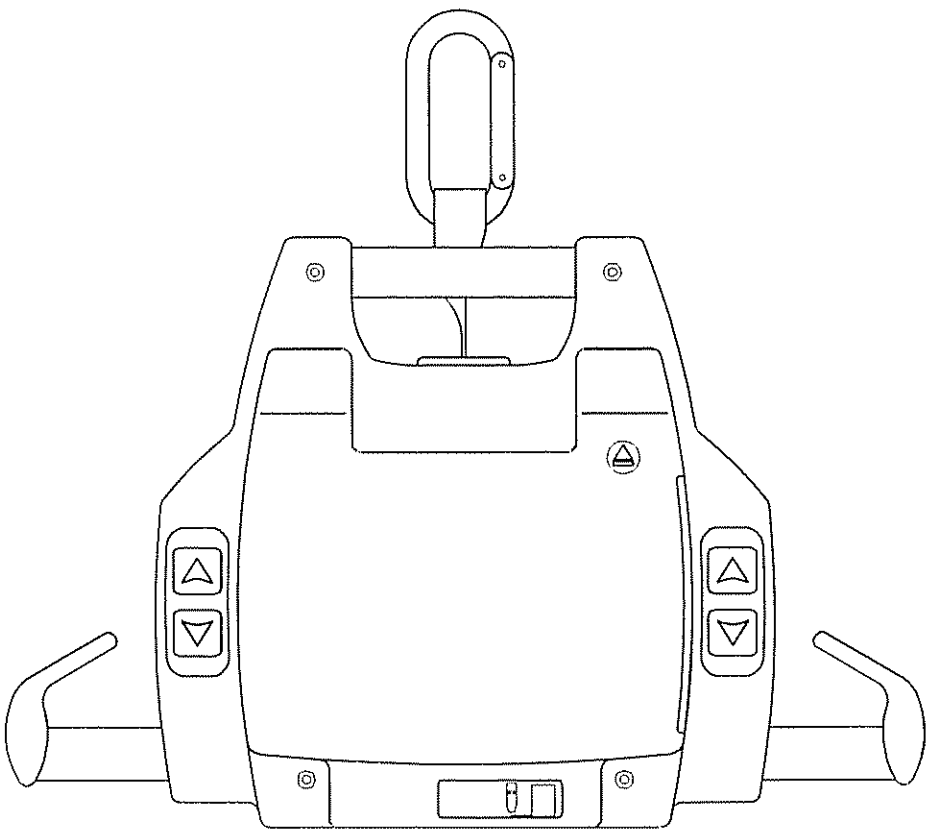

SUNRISE MEDICAL

TABLE OF CONTENTS

Introduction 2
Important Safeguards 3
Description of Equipment 4
Operation 6
How to Use the Voyager Portable 6
Emergency Lowering Feature 7
Battery Information 7
Maintenance & Care 9
Troubleshooting 14
Parts and Accessories 15
Log 15
Warranty 16

⚠WARNING

This manual contains important safety and maintenance instructions. Please read it carefully before using your Guardian Voyager and refer to it as often as needed for safe and efficient use.

If you have questions regarding the safe use and/or assembly, maintenance or specifications of your Guardian Voyager, you should call Customer Service at 800-333-4000, 303-218-4600 or from Canada at 800-263-3390

For service and repair, remember your authorized Sunrise supplier is able to provide the assistance you need.

Save this manual for future reference.

INTRODUCTION

SUNRISE LISTENS

Thank you for choosing a Guardian Voyager Lift. We want to hear your questions or comments about this manual, the safety and reliability of your Voyager Lift and the service you receive from your Sunrise Medical Supplier. Please feel free to write or call us at the address and telephone number below:

Sunrise Medical
Customer Service Department
7477 East Dry Creek Parkway
Longmont, Colorado 80503
(303) 218-4600 or (800) 333-4000

FOR ANSWERS TO YOUR QUESTIONS

Your authorized supplier knows your Voyager Lift best and can answer most of your questions about its safety, use and maintenance. For future reference, fill in the following:

Supplier: _____

Address: _____

Telephone: _____

Serial #: _____

Date Purchased: _____

EQUIPMENT IDENTIFICATION

The unit's identification number (specification, model, serial number) appears on a nameplate attached to the back panel.

RECEIPT OF EQUIPMENT

Upon receipt of the equipment, verify it against the packing list to ensure complete delivery. Inspect the equipment for possible damage due to shipping. If there is any damage, DO NOT USE the equipment and notify the carrier immediately to file a claim. Furnish complete information concerning damage claims or shipping errors to your supplier. Include all equipment identification numbers along with a full description of damaged parts.

IMPORTANT SAFEGUARDS

⚠WARNING

DO NOT ATTEMPT TO USE THIS EQUIPMENT WITHOUT UNDERSTANDING THIS MANUAL.

To ensure safe operation, read the entire manual before installing, operating or servicing this equipment.

If anything is not completely understood, please contact your supplier for more details. Failure to comply with warnings in this manual may result in injury or damage.

Keep this manual in a safe place for future reference. Keep key provided with the lift where it is readily available should emergency lowering ever be required.

Contents of this book are subject to change without prior notice to users.

Important information is highlighted by the following terms which appear throughout the manual. Pay particular attention to the information provided under these headings.

⚠ **WARNING–** Symbol is intended to alert user to the hazards or unsafe practices which could result in serious bodily harm.

CAUTION– Intended to alert the user of the presence of important operating and maintenance instructions, which could prevent product damage or possible personal injury.

NOTE– Offers helpful information concerning certain operating procedures.

Additional copies of this manual can be obtained from your supplier. Please quote the product model number.

IMPORTANT - READ AND UNDERSTAND THESE INSTRUCTIONS OR SERIOUS INJURY MAY RESULT.

⚠WARNING

FAILURE TO FOLLOW ALL INSTRUCTIONS COULD RESULT IN INJURY OR DEATH.

KEEP THESE INSTRUCTIONS AND THE EMERGENCY DESCENT KEY WITH THE LIFT AT ALL TIMES.

READ THE OPERATION AND MAINTENANCE INSTRUCTIONS IN THIS MANUAL BEFORE INSTALLING, OPERATING OR SERVICING THIS EQUIPMENT.

⚠ WARNING:

- **Before attempting lift, read user's manual.**
- **Your lift is for transferring persons only. Do not use the lift for any other purpose.**
- **Always carry out the daily checklist before using the lift.**
- **Guardian ceiling lifts are specifically designed for Guardian ceiling rail systems, slings and accessories. Slings and accessories designed by any other manufacturer should not be used and will void Guardian's warranty. Use only Guardian slings and accessories to maitain user safety and product utility.**
- **DO NOT use a Guardian sling on any other manufacturers' lifts.**
- **Guardian ceiling lifts are intended to be used for persons within the specified weight limit indicated for the lift. Do not attempt to lift more than the weight limit indicated.**
- **Always plan your lifting operations before attempting to transfer a person.**
- **Do not use a sling that is not recommended for the lift.**
- **Never use a damaged, torn or frayed sling. May result in serious injury or death.**
- **Always fit the sling according to the instructions in the sling user manual.**
- **Always follow the lifting procedures outlined in this manual.**
- **Use all controls and safety features according to the instructions in the user manual. Never attempt to force an operating or safety control. Forcing will only strain or damage a control and may compromise safety.**
- **DO NOT store the charger in a shower, bath or other area with high humidity.**
- **DO NOT drop the lift or battery. Dropping the battery or lift may cause internal damage that is not easily seen. If damage is suspected have it examined by a qualified person.**
- **Replace any precautionary or instruction labels that cannot be easily read.**
- **IMPORTANT– Keep all components of the lift clean and dry and have electrical and mechanical safety checkpoints done as instructed in the Maintenance section of this manual.**

SHOCK PREVENTION

⚠ WARNING:

- **DO NOT touch or use a lift with bare conductors or a damaged power cord. Electrically live equipment can electrocute a person. If the lift has any exposed or damaged wires, contact your local dealer immediately.**
- **IMPORTANT: The safety of this equipment relies on a properly installed EARTH connection. DO NOT connect to an unearthed mains plug or socket. It is the responsibility of the customer to ensure the mains supply in their premises is correctly earthed.**
- **DO NOT splash or expose electric parts of the device to water or moisture.**
- **Check the nameplate for voltage and cycle requirements. These requirements may differ from country to country. Do not attempt to use the lift in an area that has different voltage and cycle requirements.**

FIRE AND EXPLOSION PREVENTION

⚠ WARNING:

- **Batteries may explode, leak and cause personal injury if not disposed of properly.**
- **Do not place or store the battery under direct sunlight or near a heat source.**
- **Do not dispose of in fire.**
- **Do not short the battery terminals.**
- **Do not incinerate.**
- **Flush with water if electrolyte (Acid) comes in contact with skin or eyes.**
- **Batteries must be recycled; dispose of them according to local law instructions. When returning batteries, insulate their terminals with adhesive tape, etc.; otherwise the residual electricity in used batteries may cause fire or explosion.**

EQUIPMENT WARNING LABELS

Inspect all precautionary labels on the equipment. Order and replace all labels that cannot be easily read.

DESCRIPTION OF EQUIPMENT

OPERATING FEATURES

- Lifting capacity: 440 lbs. (200 kg)
- Ultra-light: 12 lbs. (5.45 kg) (battery included)
- Electronic soft-start and soft-stop motor control
- Easily accessible controls on both sides of the unit
- Manual emergency lowering device in case of electrical failure
- Emergency brake in case of mechanical failure. Operates on the same principle as a car safety belt mechanism
- Quick-Release feature allows very fast winding and unwinding of the strap before and after transfer operation.
- Anti-crush feature stops the lift when there is no tension on the strap, avoiding any injury to the user. This feature also prevents the strap from getting twisted inside the machine.
- Current limiter for circuit protection in case of overload
- Low battery disconnect system to protect batteries from been drained
- Lifting speed: 1.6 in/sec (4 cm/sec)
- Strap length up to 88 in (2.2 m); tested for 3000 lbs. (1363.6 kg)

The CE mark

The Voyager Portable carries the CE mark and complies with the following EC directives:

- Medical Devices Directive (93/42/EEC)
- EMC Directive (89/336/EEC)
- Low Voltage Directive (73/23/EEC)

WHAT'S INCLUDED

ITEM	QTY
Voyager lift	1
Battery	1
Charger	1
Power cord	1
4mm Allen key	1
Instruction manual	1

PARTS DESCRIPTION

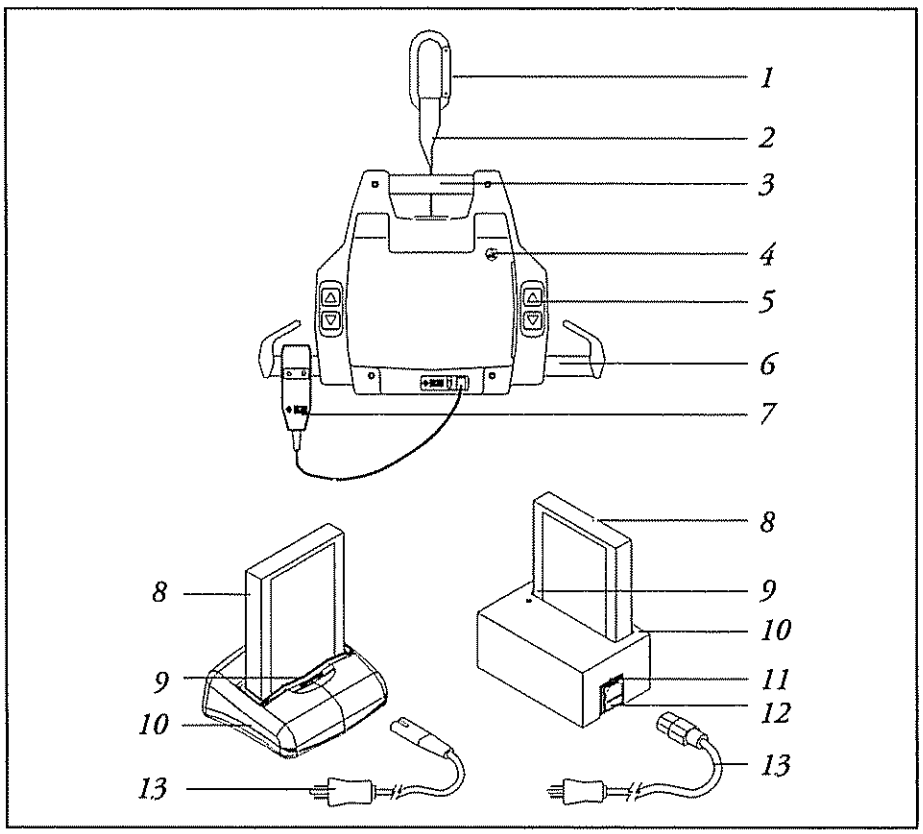

1. *Hook*
2. *Strap*
3. *Carry handle*
4. *Battery eject button*
5. *Control buttons*
6. *Carry bar*
7. *Optional handset*
8. *Battery*
9. *Charge indicator*
10. *Charger*
11. *Power cord inlet*
12. *Fuse magazine*
13. *Power cord*

SPECIFICATIONS

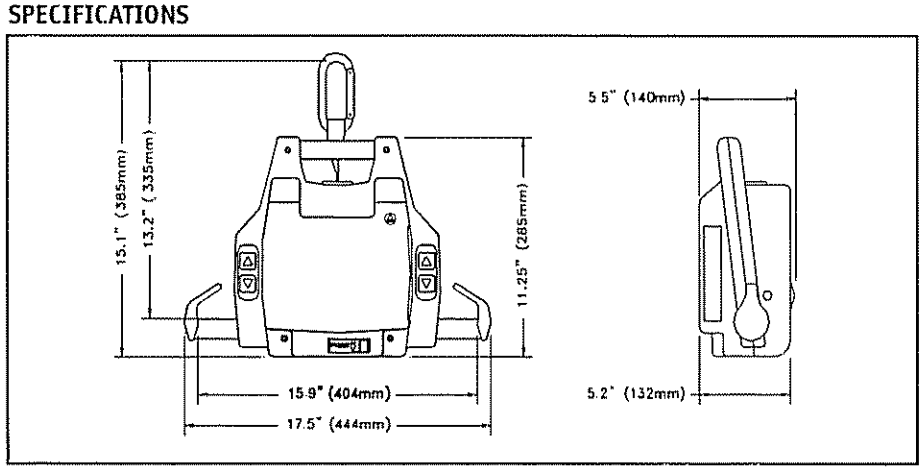

OPERATION

⚠WARNING

Read "Safety Instructions and Warnings" before attempting to use the Voyager Lift.

Always perform the daily checklist before each lift use.

CAUTION– Carry the Voyager Portable by its handle only. Do not carry the lift with the reacher accessory or other accessory not intended to be used to carry the lift. Damage to the lift may occur.

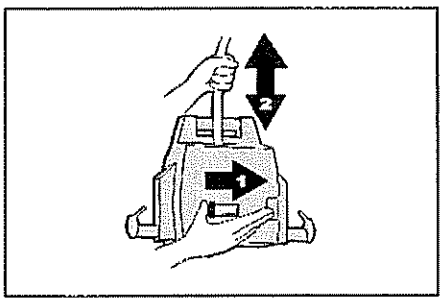

Figure 1

HOW TO USE THE VOYAGER PORTABLE

1. Install the sling (see instructions included with your sling).
2. Take the battery out of the charger and insert it into the lift. Make sure the silver contact points go inside the lift.
3. Once the sling is installed, unwind the strap. There are two ways to unwind the strap:
   a. Press the [⬇] button while holding tension on the strap with the other hand. (There must be tension on the strap for the lift to function.)
   b. The other way to unwind the strap is to use the Quick-Release. Push the knob (1) and pull the strap out of the lift (2) (Figure 1).

CAUTION– Push knob completely over to ensure the Quick-Release will work properly

CAUTION– Quick-Release will not work if there is tension on the strap. Make sure the strap has some slack in it before attempting to slide the knob over. DO NOT force the knob. It should slide easily.

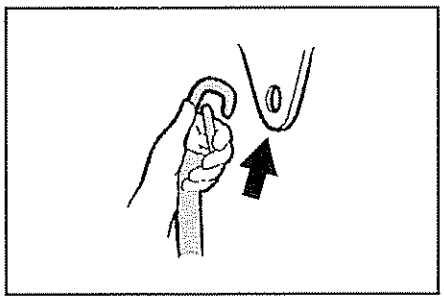
Figure 2

4. Attach the round hook to the trolley in the track (Figure 2).
5. Move the lift over to the person being lifted.

CAUTION– Hold the lift with one hand at all times when near a person.

6. Lower the lift below the chin before beginning to attach the sling straps (to avoid the risk of facial contact caused by movement of the lift). For a person in a lying position, lower the lift near the thorax, then install the straps.
7. Attach the straps of the sling as described in the Sling Instructions for the sling to be used.
8. Carefully observe the user's safety as you lift the person slightly by pressing the [⬆] control button.

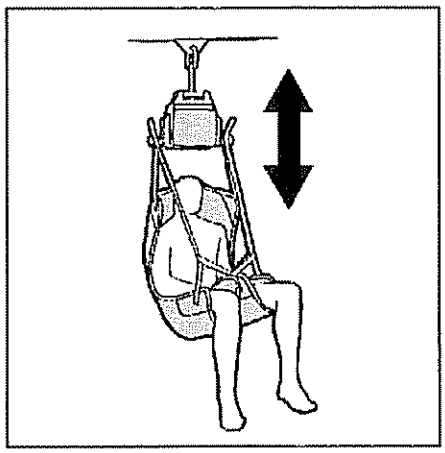
Figure 3

⚠WARNING

BEFORE LIFTING:

- **Make sure that all straps are attached to the carry bar.**
- **Make sure the person being lifted is comfortable.**
- **Make sure the sling is not caught on an obstruction (wheelchair brake or arm of chair).**

If any problems occur, lower the person being lifted immediately and correct the problem.

9. Lift until the buttocks of the person being lifted clear the arm supports or the top of the bath or bed before moving the person (Figure 3). Guide the legs past any obstacle.
10. When the person being lifted is located above the desired point of transfer and ready to be lowered, press the [⬇] button.
11. Use the handles on the back of the sling to position the person being lifted when transferring into a chair. Hold the handle firmly as the sling lowers, and the sling will tilt back to position the person being lifted.
12. Once the person being lifted is properly seated and the straps are loose, remove the sling from the lift.

CAUTION– Hold the lift with one hand at all times when near a person.

13. Slide the lift away from the person being lifted.
14. Unhook the lift from the trolley in the rail and use the Quick-Release to shorten the strap. To do so, push the knob (1) and hold the strap while it winds itself into the lift (2) (Figure 1).

CAUTION– Push knob completely over to ensure the Quick-Release will work properly

CAUTION– Quick-Release will not work if there is tension on the strap. Make sure the strap has some slack in it before attempting to slide the knob over. DO NOT force the knob. It should slide easily.

CAUTION– When using the Quick-Release, hold the strap in your hand and release the knob only when the strap is not moving in or out of the lift. This will prevent wear of the internal components

15. Sling may be removed from around the person being lifted.

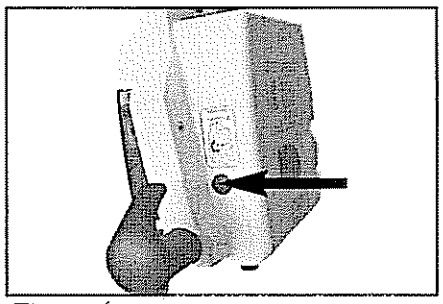

Figure 4

EMERGENCY LOWERING FEATURE

The Voyager Portable has an emergency manual-lowering feature in the event of an electrical or functional failure.

If the lift malfunctions when a person is being transferred, the emergency manual lowering device provides a safe way of lowering the person onto a chair or bed.

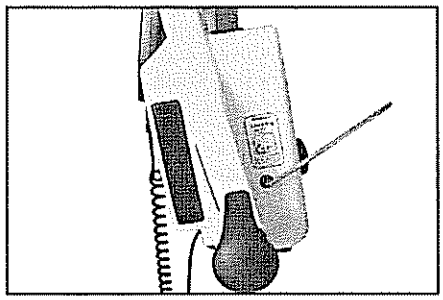

Figure 5

To operate the emergency lowering feature:

1. Find the rubber stopper and label on the side of the lift (Figure 4).
2. Pull the rubber stopper out of the Voyager Portable casing - DO NOT DISCARD.
3. Move the person being lifted over a bed or chair.
4. Using the allen key provided with this manual, turn the key clockwise to lower the person being lifted into the chair (Figure 5). As the key turns the motor directly, each key turn will move the user slightly.
5. To lower the person being lifted more quickly, use a power drill with a 4mm allen key bit.
6. Once the person being lifted is lowered safely into a chair or bed, take the lift to a certified technician to be serviced.

BATTERY INFORMATION

- 24 Vdc, 2.0 Ah interchangeable and rechargeable battery.
- Provides 10 to 30 transfers per battery charge. This will vary depending on user weight and battery condition.

CAUTION– Do not drop battery. A dropped battery may have internal damage that is not visible. It may lose its ability to recharge.

Due to internal damage caused when the battery is dropped, the battery may indicate it is fully charged, when in fact the battery cannot hold a full charge. A green light indicated on the charger may not accurately reflect a full charge on a damaged battery.

CAUTION– NEVER attempt to use a battery that appears to be damaged or dented.

CAUTION– DO NOT store battery near a heat source. Heat will damage the battery.

Always keep metal battery contacts clean.

The life cycle (number of charging cycles) of the battery is largely dependent on the depth of discharge in each cycle. The deeper the battery is drained the shorter the battery life. The life of the battery is also related to such factors as varying temperatures and rest periods between charge and discharge.

NOTE– To prolong battery life, put the battery into the charger WHENEVER THE LIFT IS NOT IN USE. The battery will not over-charge.

Guardian uses sealed lead-acid batteries. Unlike nickel-cadnium batteries, these batteries do not have any memory effect. Therefore, batteries should not be completely drained before recharging.

NOTE– Do not drain battery excessively. This will dramatically reduce the battery life.

If the low battery buzzer sounds, be sure to recharge the battery as soon as possible.

Charging the Battery

⚠WARNING

Do not operate the charger unit with a damaged cord or if the unit has been dropped or damaged.

⚠WARNING

DO NOT forcibly bend the power cord or place a heavy object on it. This will damage the cord and may cause fire or electrical shock.

⚠WARNING

DO NOT pour liquid on or near the charger.

CAUTION– DO NOT place the charger unit in locations that are:
- Extremely hot
- Dusty or dirty
- Very humid
- Moving or vibrating

CAUTION– Do not attempt to put a damaged battery into a charger. Inspect the battery first for dents or damage.

Charging the battery with charger #98820:

1. Eject the battery from the lift unit by using the Battery Eject Button (1). Keep your hand near the opening to catch the battery (2) (Figure 6-A).

CAUTION– Keep one hand near the opening for the battery before pushing Eject button. Do not allow the battery to eject and fall.

2. Insert the battery into the charger (3) with the silver contact points of the battery going into the charger (Figure 6B).
3. The indicator light will illuminate red to white to green depending on the battery drain. If the light does not go on, check "Troubleshooting" in this manual for assistance.
4. If the battery is low, the light will show red or orange when you place the battery in the charger. The light will gradually turn to a white or yellow color, then to green when fully charged.

NOTE– Whenever possible, leave the battery in the charger when the lift is not in use.

NOTE– At minimum, charge the battery until the light is green before using again. This will extend the life of the battery.

5. When the lift is needed again, pull the battery out of the charger and gently slide it back into the Voyager Portable lift. The silver contacts should be inside the lift.
6. The power cord can remain plugged into the wall indefinitely, convenient for overnight recharging.
7. If the battery has been in the charger for an extended period of time, or if the battery has not been drained, it is possible that the light on the charger will turn off or not go on. This is only the case when the battery is 99.9% charged.
8. To test the charger, use the battery in the lift a few times then put the battery in the charger. If the light still does not go on, see "Troubleshooting" section of this manual.

Charger Specifications (98820): 120 Vac, 60 Hz, 0.5A

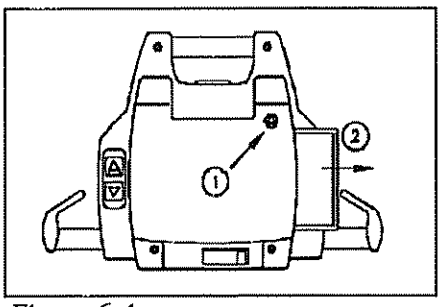

Figure 6-A

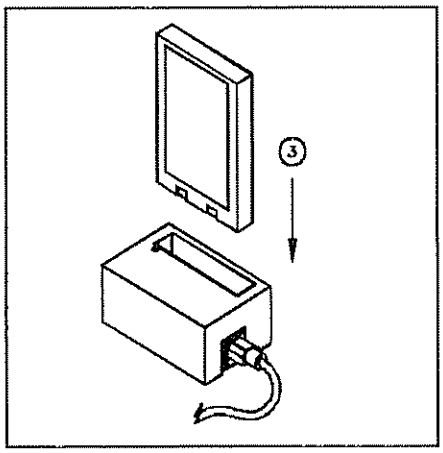

Figure 6-B

Charging the battery with charger #93500: (Figure 7)

1. Check to make sure the green light on the charger is illuminated (Figure 8). This indicates that the charger is on. Insert the battery into the charger with the silver contact points of the battery going into the charger.
2. The charging indicator light will flash yellow while the battery is charging. If the battery is approximately within 85% of being fully charged, the charging indicator light will illuminate solid yellow (Figure 8).
3. If the battery is low, it will take approximately 2 hours for a full charge.

NOTE– Whenever possible, leave the battery in the charger when the lift is not in use.

NOTE– At minimum, charge the battery until the light is solid yellow (not flashing) before using again. This will extend the life of the battery.

4. When the lift is needed again, pull the battery out of the charger and, gently slide it back into the Voyager portable lift. The silver contacts should be inside the lift.
5. The power cord can remain plugged into the wall indefinitely, convenient for overnight recharging.
6. The battery can be left in the charger for an extended period of time without damaging either the charger or battery.
7. If the green light does not go on when the charger is plugged into an electrical outlet, see "Troubleshooting".

Charger Specifications (93500):

- Class 2 power cord rated at 2.5 A (100-240 Vac, 50-60 Hz)
- Charger input: 100-240 Vac, 50-60 Hz, 50VA
- Charger output: 27 Vdc 1A
- Input fuse: 1A 250 V located inside the charger

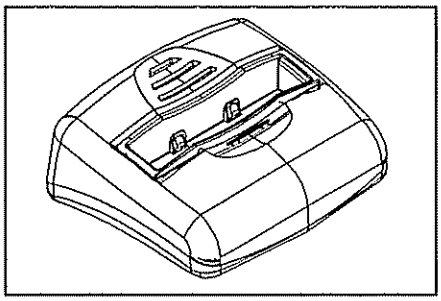

Figure 7

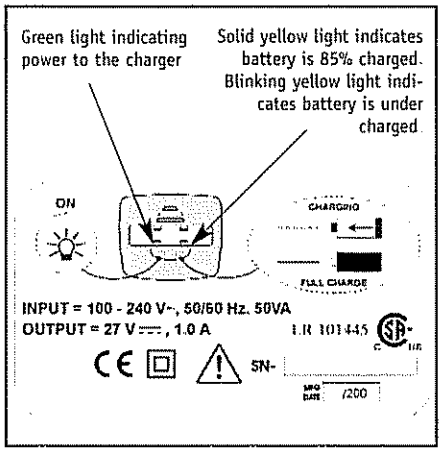

Figure 8

MAINTENANCE & CARE

⚠WARNING

Always carry out the daily checklist before using the lift.

⚠WARNING

Unauthorized alterations made to the Voyager Portable could cause serious injury.

⚠WARNING

The Voyager Portable and accessories should be thoroughly inspected periodically. Sunrise Medical recommends an authorized service dealer perform the inspections. Daily checks should be performed by the user before use.

⚠WARNING

Preventative maintenance specified in this manual can prevent accidents and reduce repair costs.

DAILY CHECKLIST

The following procedures must be followed before each use:

- Charge the battery whenever the lift is not in use.
- Inspect the battery before placing it in the Voyager Portable. If the battery appears to have any damage, DO NOT USE. Replace the battery immediately.
- Inspect the lift for any damage. If the lift casing does not look properly aligned, if there are any cracks or other damage on the lift or if any parts are missing, DO NOT USE. Contact your local provider to have the lift serviced.
- Attach the lift to the trolley in the rail. Inspect the visible strap for any signs of wear, frays, loose threads or other damage. If there is any evidence of damage, DO NOT USE. Contact your local provider to have the lift serviced.
- Inspect the sling for tears, frayed straps or loose stitching. If the sling has any of the above damage, DO NOT USE. Contact your local provider to have the sling replaced.
- Inspect the reacher and adjustable extension strap (if you have these options) for wear. Check the adjustable extension strap for frays or loose stitching. Check the reacher for damage in the metal hook or handle. DO NOT USE if there is any damage.
- Inspect the hook at the top of the strap to ensure it is properly attached and there is no damage to the hook.
- Make sure the lift is free to traverse the rail.
- Check the control buttons for correct functioning.

INSPECTION AND CLEANING

Clean the Voyager body with a soft dry cloth or a soft cloth lightly moistened with a mild detergent solution. Do not use any type of solvent that may damage the finish.

⚠WARNING

DO NOT immerse lift in water.

To ensure a better rolling surface for the trolley wheels, clean the inside of the track every four months. To do so, insert a damp cloth in the opening and slide it from one end of the track to the other.

⚠WARNING

Always replace rail end stopper (if they have been removed) after servicing.

Strap Inspection

This equipment is built with a strap that can withstand a load of 3000 lbs. (1364 kg). However, if this strap is damaged or shows signs of wear, the acceptable load on the strap before rupture can drop rapidly and present a danger for the person being lifted or the caregiver.

Sunrise Medical recommends thoroughly inspecting the strap every two months as follows:

1. Completely unwind the strap.
2. Look for any of the signs of wear described in (Figure 9).

⚠WARNING

If there is any sign of wear as indicated here or other visual defect, the strap should be changed immediately. By continuing to use the lift without changing the strap, caregiver and user safety is greatly compromised. In any case, Sunrise recommends to change strap at least every two years.

NOTE– Make note of results of inspection in the logbook on the back of this manual.

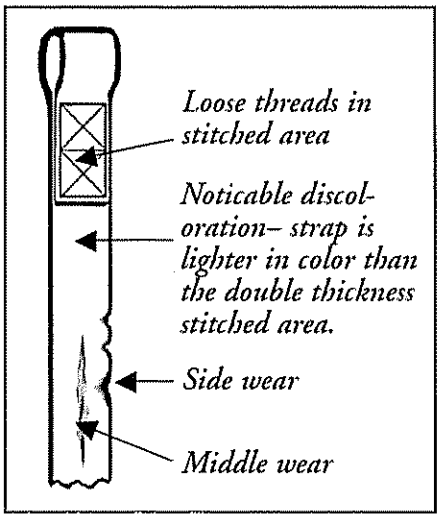

Figure 9

HANDLING AND STORAGE

Avoid violent shock during transportation.

The lift should not remain stored for long periods of time without recharging the batteries.

NOTE– Sunrise Medical recommends charging of batteries at least every two weeks even if the lift is not used. This will prevent premature aging of batteries.

BATTERY REPLACEMENT

Sunrise uses sealed lead-acid batteries. Unlike nickel-cadmium, these batteries do not have any memory effect. Therefore, batteries should not be completely drained before recharge.

Replace the battery when it has been dropped or if there is a noticeable reduction in the number of transfers that can be performed between charges. If you notice the Voyager Portable "beeping", see the instructions in "Troubleshooting" to ensure it is a problem with the battery.

To replace a battery, contact your local provider and order product number 98850.

NOTE– DO NOT ATTEMPT TO USE A BATTERY NOT SPECIFIED BY SUNRISE MEDICAL.

⚠WARNING

Guardian batteries are specially designed for Guardian charging systems. Attempting to use an unauthorized battery may seriously damage the lift and/or the charger or cause serious injury.

CHARGER FUSE REPLACEMENT

If the charger light doesn't illuminate when there is a battery in it, perform the following steps:

1. Make sure the battery is properly placed in the charger. The silver contact points should be inside the charger.
2. Check to make sure the power cord is correctly plugged in to the charger and the wall.
3. If the light still doesn't work, plug the charger into a different outlet in a different area to ensure that the outlet is working properly. Pull the power cord out of the charger. Under the socket for the power cord, there is a drawer or magazine where there are fuses. Using a pen or screwdriver, pull the drawer out gently. Pull the burned fuse out of the drawer that is next to the charger (Figure 10) and discard. Take the replacement fuse and place it in the same slot where the burned fuse was. Slide the drawer back into the charger. Plug the power cord into the charger. Place the battery into the charger and check for the light.
4. If the light does not illuminate, contact your local dealer for assistance.

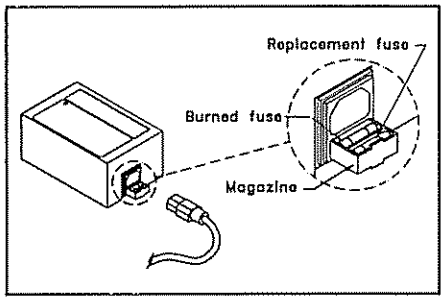

Figure 10

SLING SAFEGUARDS, INSPECTION AND CARE

For maximum user safety and hygiene, read the following instructions:

PLEASE READ AND UNDERSTAND THE FOLLOWING WARNINGS BEFORE USING A GUARDIAN SLING.

⚠WARNING

Guardian ceiling lifts are specifically designed for Guardian ceiling lift systems, slings and accessories. Slings and accessories designed by any other manufacturer are prohibited and will void Guardian's warranty. Use only Guardian slings and accessories to maintain user safety and product utility.

⚠WARNING

The person to be transferred must be assessed by a qualified professional as able to be transferred before attempting to transfer.

⚠WARNING

Observe a trained expert perform the transfer procedures and practice the transfer procedure several times with a capable individual before attempting to transfer a person with limited capabilities.

⚠WARNING

Before transferring the user from a stationary object (wheelchair, bath or bed), slightly raise the person off the stationary object and check that all sling attachments are secure. If any attachment is not correct, lower the user and correct the problem, then raise the user and check again.

⚠WARNING

Use a sling recommended by the user's doctor, nurse or medical assistant as appropriate for the person's ability and needs.

⚠WARNING

DO NOT use any kind of plastic backed incontinence pad or seating cushion between the user and the sling material that may cause the user to slide out of the sling during a transfer.

⚠WARNING

DO NOT exceed the maximum weight limitation of the sling.

⚠WARNING

Whenever possible have someone assist you to ensure the person's safety at all times.

READ ALL INSTRUCTIONS BEFORE ATTEMPTING TO INSTALL A SLING.

Laundry Instructions

The following symbols are used on sling labels and relate to washing instructions:

60°C Maximum washing temperature 140° F (60° C) permanent cycle.

Do not use bleach.

Do not dry clean.

Tumble dry low.

Do not iron.

For normal washing and cleaning, follow the care instructions on the label of the product.

Storage

Slings should be stored away from direct sunlight, stress, pressure, excessive heat or humidity. The sling should be kept away from contact with sharp objects, corrosives or other possible damaging material.

1. Check for any sign of wear on sling straps as described in Figure 11 and at the strap-sling junction. Buckles should be checked to ensure that the locking/unlocking mechanism opens and closes easily and is secure when locked.
2. Check for any sign of deterioration of the sling material. Check for general external wear, local abrasion, cuts, holes or burns in the webbing and for chemical attack.
3. Look at "stitched areas" for broken, worn, pulled or unraveled stitches.
4. Sling should be cleaned as indicated on the tag.

⚠WARNING

If there is any sign of wear or deterioration as indicated above or other visual defects, the sling should be changed immediately. By continuing to use the lift without changing the sling, caregiver and user safety is greatly compromised and serious injury or death may result.

NOTE– Make note of results of inspection in the logbook at the back of this manual.

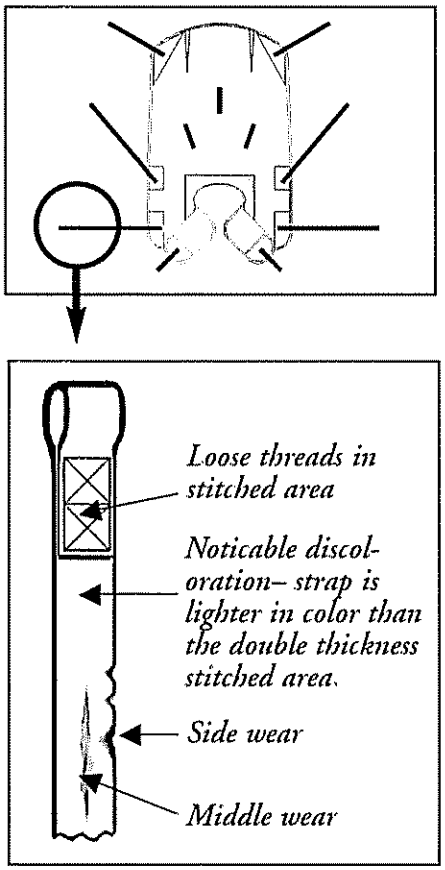

Figure 11

PERIODIC INSPECTION

Sunrise Medical recommends the Voyager Portable and its accessories are thoroughly examined and tested every six months. The examination and test should be conducted according to Sunrise recommendations.

MAINTENANCE, INSPECTION AND TEST

⚠WARNING

Failure to follow these instructions could result in serious injury or death.

Sunrise Medical recommends a thorough inspection and test of the Voyager and lifting accessories, slings, etc. every six months. The examination and test should be conducted according to the procedures below.

Carry Bar

1. Check the carry bar for damage or wear.

Carriage Wheels

1. Check for damage, cracking or rust.
2. Check for wear on the axles.
3. Check for firm attachment.
4. Lubricate axles.

Lifting Strap

1. Completely unwind the strap.
2. Check strap for wear and fraying.
3. Check stitching.
4. Check for degradation due to chemical attack.
5. Replace the strap at least every two years.
6. Check carabiner for damage, wear, cracks and correct functioning of the safety latch.

Lift Unit

1. Confirm correct operation of the emergency brake.
2. Check for wear on the drive chain and sprockets.
3. Inspect internal plugs and sockets for damage and good electrical contact.
4. Confirm correct operation of the mechanical emergency lower function.
5. Inspect all welds for cracking.
6. Inspect Quick-Release system for wear.
7. Lubricate chain and sprocket.

Charging

1. Confirm correct functioning of the charger.
2. Check for correct fuse rating.
3. Check electrical cord plug and socket for proper mating; look for damage, evidence of burning or arcing.
4. Check electrical cord plug is fitted with the correct rated fuse.
5. Check charger contact for corrosion.
6. Confirm charge status lights are functional.

Electric Controls, Plugs & Sockets

1. Check the Battery Eject button for correct functioning.
2. Check that control buttons function in both directions.
3. Check the hand control (if fitted) for correct functioning in both directions.
4. Check the fit of the hand control plug and socket (if fitted).

Slings & Accessories

1. Confirm the sling is a Guardian sling.
2. Check the load bearing straps for wear or fraying.
3. Ensure the straps are securely stitched.
4. Check the body of the sling for wear or cuts in the fabric.
5. Check any side suspenders for wear on the hooks or central suspension point.
6. Inspect strap extension, if present, for wear.
7. Inspect arm extension, if used, for wear and correct functioning.

Track Installation

Refer to Easytrack User Manual for installation and maintenance instructions.

TROUBLESHOOTING

PROBLEM	TO CHECK
1. The unit doesn't work when you press the up or down buttons on the handset.	1. Make sure the handset is plugged correctly into the unit. 2. Use the control switches directly on the unit. If they are working, it indicates a problem with the handset; you would then need to change the handset.
2. The unit doesn't work when you press the up or down buttons on both sides of the lift.	1. Is the battery charged and correctly installed? 2. Ensure the battery is inserted into the lift with the silver contact points inside the lift. 3. Place the battery into the charger and check the light on the charger. If the light remains red, leave the battery in the charger for approximately two hours. 4. Is the Quick-Release knob completely to the left (locked) position? If not, lift will not operate. Tighten the tension on the strap to help move the Quick-Release knob. 5. Is there tension on the strap? The "Anti Crush" feature will prevent the lift from working if there is no tension. 6. If all of the previous points have been checked without success, you probably have a motor or electric problem. You then need to call your local Sunrise Medical provider.
3. The unit starts and stops repetitively.	1. If the load is more than safe working load, the unit will not work due to an overload protection on the motor. 2. Has the lift been making a "beeping" sound? The battery is low and needs to be charged.
4. The lift emits a "beep" during utilization. The unit may stop lifting but you can still lower it.	1. Batteries are low, place in charger.
5. Charge indicator on the charger (green-red) doesn't light up when the battery is in the charger.	1. Check the orientation of the battery. The silver contact points should be inside the charger. 2. Is the charger plugged into a standard outlet? 3. Check the condition of the fuse. If needed, change it with a spare one (see Maintenance section of this manual). 4. Has the battery been in the charger for many hours? (See "Battery Information" in the Operation section.)
6. Battery is always dead after a few transfers (3 to 5).	1. Replace battery with a new one. The life of the current one is probably nearly over (see "Battery Replacement" in the Maintenance section).
7. The light on the charger shows green when the battery is inserted, yet the lift will only do one or two transfers.	1. Battery has either been dropped or damaged in some other way. Replace the battery.
8. The light on the charger shows green when the battery is inserted, yet the lift will only work when there is no one in the lift. When you attempt to transfer someone, the lift stops.	1. Battery is damaged - have it replaced.
9. The light on the charger always lights up red and does not turn to green after an overnight charge.	1. Try a different battery in the charger if available. 2. Have the battery and charger checked by your local provider.
10. The battery does not slide into the lift.	1. Check if there is any damage to the battery that would interfere in the lift battery's slot. IF THERE IS DAMAGE, DO NOT USE THE BATTERY. 2. Try to slide in another battery to see if there is any damage in the lift battery's slot. If so, call your local Sunrise Medical provider; if not, discard the damaged battery.
11. Cannot remove battery from the lift.	1. See "Charging the Battery" in Operation section on how to remove the battery. 2. If the battery will not come out of the lift, tilt the lift to the side so that the battery opening is under the lift. With your hand guarding the opening for the battery, press the eject button on the front of the Voyager Portable while gently tapping the lift to help jolt the battery out of the lift. ONCE THE BATTERY IS REMOVED, DISCARD BATTERY AND REPLACE. 3. If you cannot remove the battery after trying the above, contact your local provider for assistance.

PARTS & ACCESSORIES

Guardian Hammock Sling (Figure 12)
The Hammock is our most universal sling. It has an incorporated head support and a unique strap system that keeps the person being lifted secure in the sling. A special polyester fabric in the seat area helps to reduce friction and makes the sling easy to place around a person being lifted and easy to remove without lifting them. Best choice for most situations, including bathing. Available in sizes Small (90000), Medium (90001) and Large (90002).

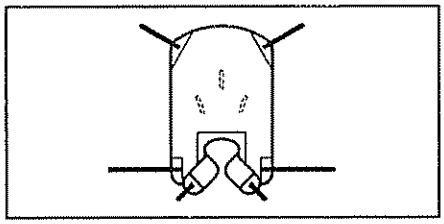
Figure 12

Guardian Hammock 6 Strap Sling (Figure 13)
The Hammock 6 Strap Sling is almost identical to the Hammock sling, except it provides extra security and a tighter fit for persons who are low-tone or who would prefer a more secure feeling. The head support is tighter and the extra straps on the side provide more lateral support Available in sizes Small (90010), Medium (90011) and Large (90012).

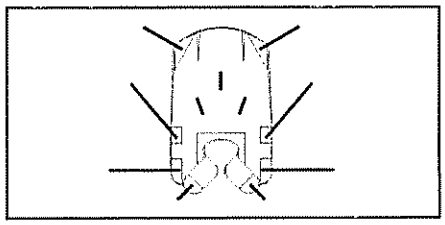
Figure 13

Guardian Quick-fit Sling (Figure 14)
The Quick-fit Sling is specially designed for persons who are stocky or obese, especially in the midsection. Padding around the buttocks and leg area helps to provide extra support comfortably. This sling does not provide head support. Available in sizes Small (90020), Medium (90021) and Large (90022).

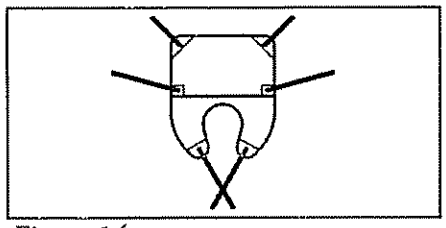
Figure 14

Guardian Hygienic Sling (Figure 15)
The Hygienic Sling is excellent for changing incontinence pads or for transfers onto a toilet, as it provides an open area from the middle of the back to the middle of the thigh. In order to use this sling, the person being lifted must have good muscle tone in their shoulders and upper body. Available in sizes Small (90030), Medium (90031) and Large (90032).

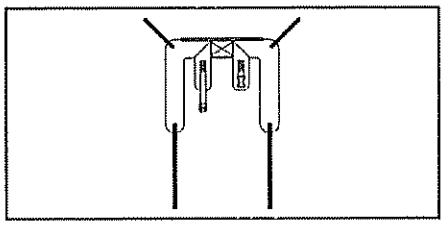
Figure 15

Arm Extension (Figure 16) ..... Item No. 98830

Adjustable Strap Extension (Figure 17) ..... Item No. 98870

Two-Button Handset (Figure 18) ..... Item No. 98890

Voyager Battery Pack ..... Item No. 98850

Voyager Battery Charger ..... Item No. 93500/98820

Voyager Portable Carry Bag ..... Item No. 98810

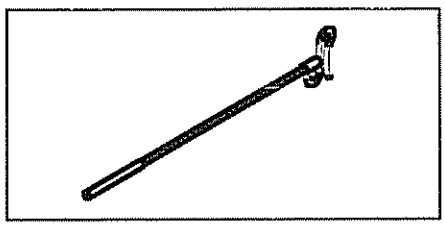
Figure 16

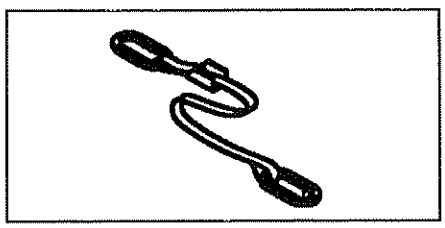
Figure 17

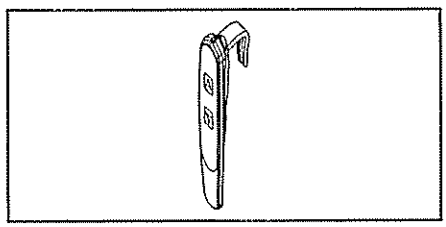
Figure 18

LOG

WARRANTY

This warranty is extended only to the original purchaser/user of Sunrise products.

Sunrise Medical Inc. warrants its products to be free from defects in material under normal use and service and will, within the periods stated below, from the date of purchase. If within such warranty period any such product shall be proven to be defective, such product shall be repaired or replaced at Sunrise Medical's option. This warranty does not include any labor or shipping charges incurred in replacement part installation or repair of any such product. Sunrise Medical's sole obligation and your exclusive remedy under this warranty shall be limited to such repair and/or replacement.

Lifter	1 year
Accessories on Lifter	1 year
Slings	1 year
Voyager Portable Batteries	6 months
Easytrack System	1 year

For warranty service, please contact the provider from whom you purchased the Sunrise Medical product. In the event that you do not receive satisfactory warranty service, please contact Sunrise Medical Customer Service at 1-800-333-4000.

Do not return products to our factory without prior authorization. Sunrise Medical will issue a Return Merchandise Authorization (RMA) Number. C.O.D. shipments will be refused; all shipments to Sunrise Medical must be prepaid. For this warranty to be valid, the purchaser must present its original proof of purchase at the moment of the claim. The defective unit, assembly or part must be returned to Sunrise Medical for inspection. The part or components repaired or replaced are guaranteed for the remaining period of the initial warranty.

Limitations and Exclusions:

The above warranty does not apply to serial numbered products if the serial number has been removed or defaced.

No warranty claim shall apply where the product or any other part thereof has been altered, varied, modified, or damaged either accidentally or through improper or negligent use and storage. Warranty does not apply to products modified without Sunrise Medical's express written consent, (including but not limited to products modified with unauthorized parts or attachments), products damaged by reason of repairs made to any component without the specific consent of Sunrise Medical, or to products damaged by circumstances beyond Sunrise Medical's control. Evaluation of warranty claim will be solely determined by Sunrise Medical. The warranty does not apply to problems arising from normal wear or failure to adhere to the instructions in this manual. Sunrise Medical slings are void of warranty if not laundered as per instructions on the sling label.

Sunrise Medical shall not be liable for damages, losses or inconveniences caused by a carrier.

This warranty replaces any other warranty expressed or implicit and constitutes Sunrise Medical's only obligation towards the purchaser. Sunrise Medical shall not be liable for any consequential or incidental damages whatsoever.

www.sunrisemedicalonline.com

Distributed by:
Sunrise Medical

7477 East Dry Creek Parkway
Longmont, Colorado 80503
(800) 333-4000
In Canada (800) 263-3390
Printed in Canada

© 2001 Sunrise Medical 12.01
900-0680 Rev. B