ATTENTION

There is a potential risk of serious injury or death associated with virtually every product regardless of its type or intended use. Stander, Inc., has worked tirelessly to minimize all risks associated with its mobility aids, yet given the types of products, users, and a myriad of things outside of our control, we cannot eliminate every conceivable risk. Accordingly, a consumer must use common sense when utilizing our products, and take into account the user's overall physical and mental health.

Read all of the materials that accompany this product before it is installed or used.

LIMITED WARRANTY

Congratulations on your purchase of your Stander's brand product. We hope that it will ease your daily living. Please read the following warranty statement for your protection.

Stander, Inc. warrants to the original purchaser that this product will be free from defects in material and/or workmanship for 1 year from the date of purchase. During the warranty period we will correct any defects in material or workmanship at no charge. All shipping cost must be paid by the original purchaser. Any replacement parts will be new and are warranted for the remainder of the original warranty or thirty (30) days from the date of shipment, whichever is longer. The original purchaser must notify Stander, Inc. during the warranty period in writing of the defect in workmanship or material. This warranty is not transferable and covers only normal use. Stander will not refund or pay for any shipping charges. The warranty does NOT cover: (1) Damage during shipment other than original shipment to retailer; (2) Damage caused by unauthorized attachments, alterations, or modifications; (3) Damage caused by the use of the product for purposes other than those for which the product was designed or intended; and (4) Damage caused by any other abuse, misuse, mishandling or misapplication.

Under no circumstances shall Stander, Inc. be liable for any special, incidental, or consequential damages based upon breach of this limited warranty, breach of contract, or strict liability.

THERE ARE NO WARRANTIES WHICH EXTEND BEYOND THOSE INDICATED HEREIN. ALL OTHER WARRANTIES, EXPRESS OR IMPLIED (INCLUDING ALL IMPLIED WARRANTIES OF MERCHANTABILITY OR FITNESS FOR A PARTICULAR PURPOSE), ARE HEREBY DISCLAIMED.

Some states do not allow limitations on how long an implied warranty lasts, so the above limitation may not apply to you. This warranty gives you specific legal right, and you may also have other rights which vary from state to state. To obtain service under this warranty, you can reach Stander, Inc. at (800) 506-9901 or (435) 755-0453.

WARNINGS

- It is critical that all users and installers of this product read and understand all of the materials provided with this product before it is installed or used. These warnings, as well as the assembly instructions, must be carefully followed to ensure that the product is properly installed and used. Failure to install or use this product properly could result in serious injury to the user(s). If there are any questions regarding the installation or use, associated risks or anything at all regarding this product do not install or use it and contact a Stander representative at (800) 506-9901 or (435) 755-0453. We are thrilled that you have chosen to use our product so we are more than happy to answer all of your questions.
- Individuals who have problems with memory, sleeping, incontinence, pain, uncontrolled body movement, who walk unsafely without assistance, or who are frail, weak, confused, restless, under the influence of drugs or any substance that could impact their balance or judgment are at a higher risk. You should first consult a physician before using this product.
- Improper installation of this product significantly increases the risk of injury.
- This product should not be used on any light weight furniture that would allow the product to become dislodged or move under during use of the product.
- Individuals who have size or weight conditions are at a higher risk of injury due to personal mobility issues and the ability of the product to be supported under the furniture.
- Children should not be allowed to hang on or play with this product.
- This product is not intended to carry the full weight of an individual. This product is only intended to provide balance and support while sitting and standing.
- This product may shift its position over time. Inspect this product frequently to ensure it is installed properly.

EC REP EMERGO EUROPE Molenstraat 15 2513 BH, The Hague The Netherlands Tel: +31 (0)70 345 8570 Fax: +31 (0)70 346 7299

Instructions:

1. Remove all components from the box and verify all parts are included as shown in Figure 1.

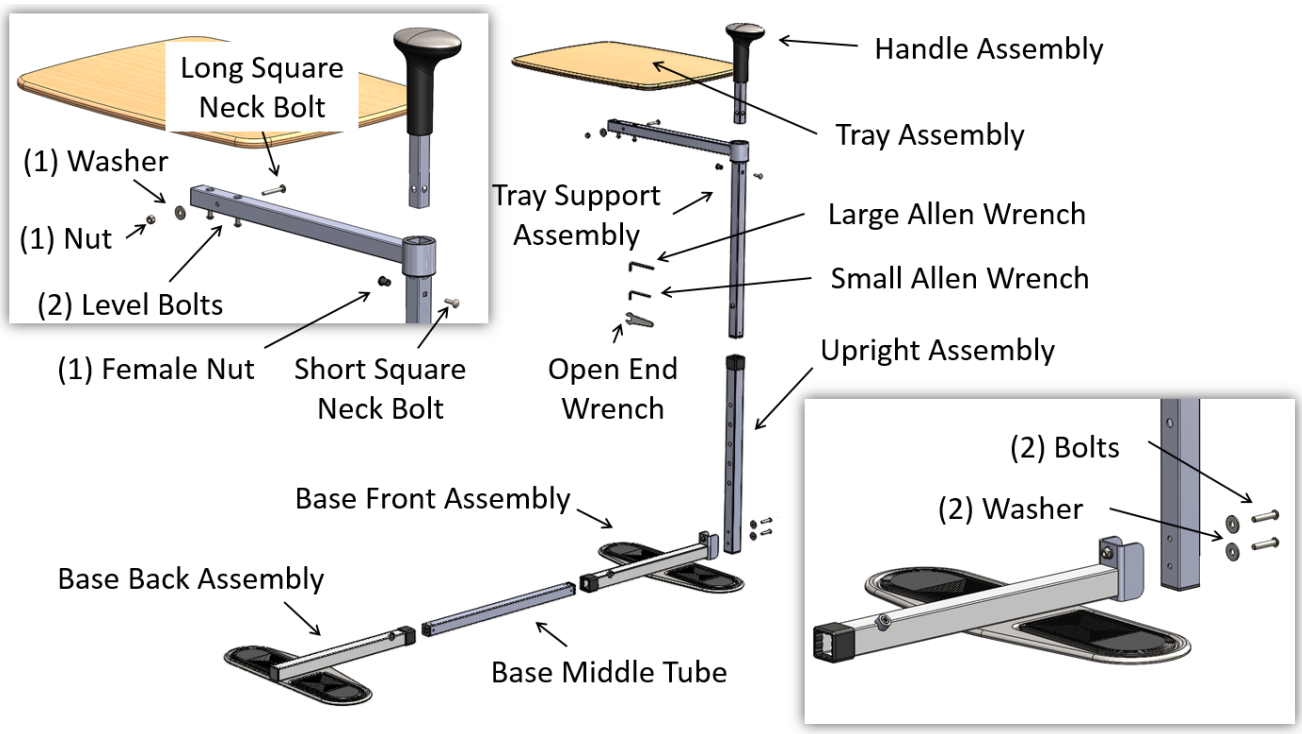

FIGURE 1

2. Slide Base Front Assembly and Base Back Assembly onto the Base Middle Tube as shown in Figure 2.

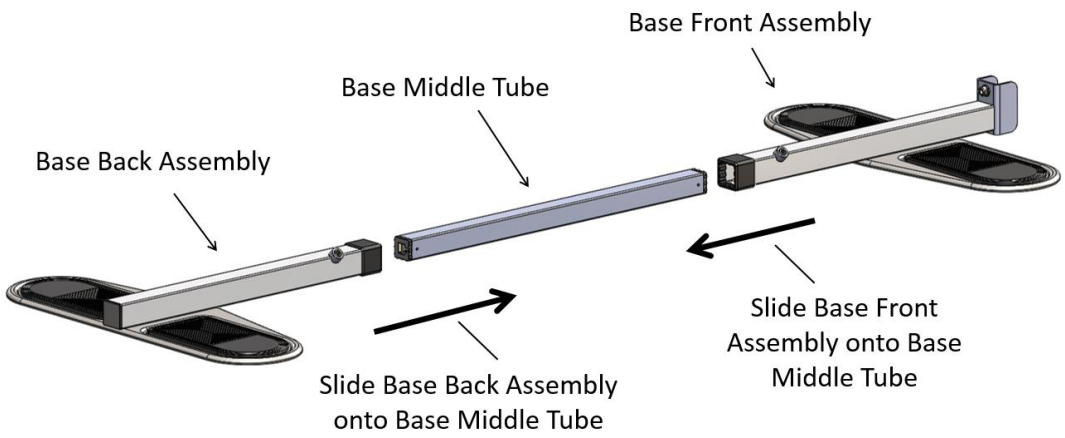

FIGURE 2

3. Position the Rubber foot pads at the same distance of the Furniture legs spacing and tighten the Set Screws with the Large Allen Wrench as shown in Figure 3. The Furniture legs should sit on the center of the Rubber foot pads.

   NOTE: The Base Middle Tube should engage the Base Front Assembly and the Base Back Assembly approximately 4 inches on each side in order for the Set Screws to properly engage.

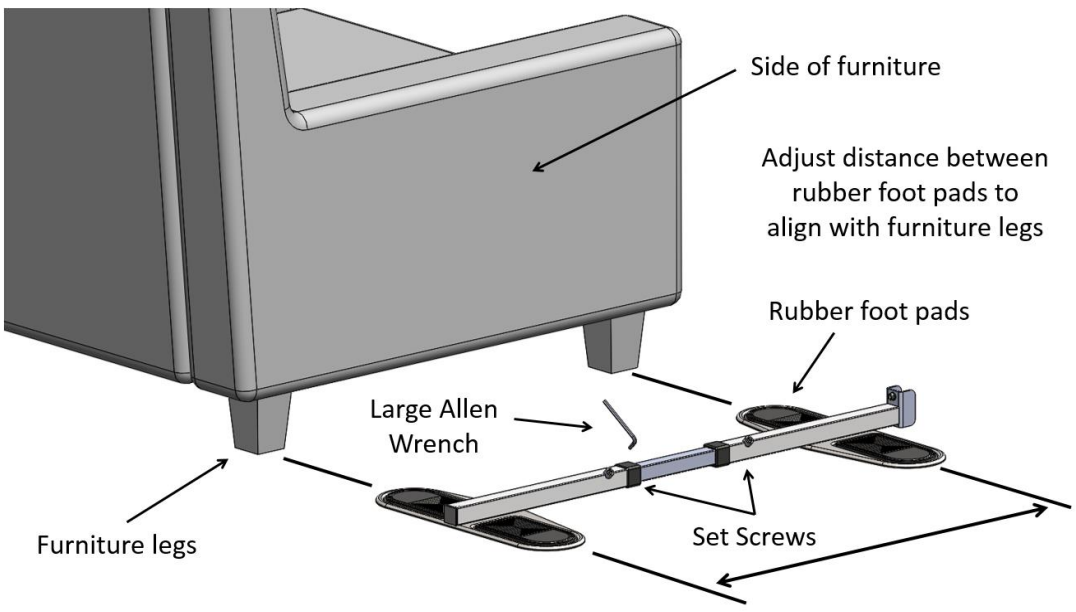

FIGURE 3

4. Attach the Upright Assembly to the Base Front Assembly with the Small Allen Wrench, 2 Bolts, and 2 Washers as shown in Figure 4.

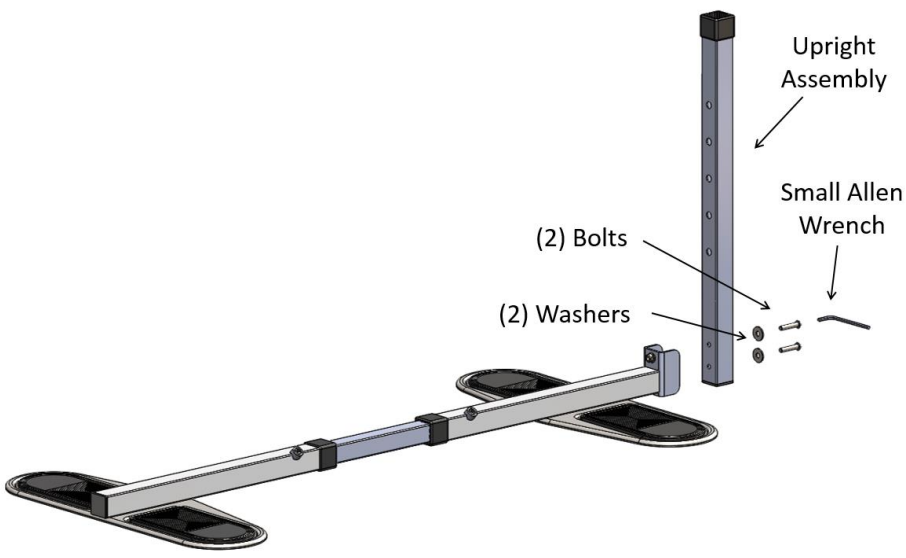

FIGURE 4

5. Using the Open End Wrench, attach the Tray Assembly to the Tray Support Assembly with the Long Square Neck Bolt, 1 Washer, and 1 Nut as shown in FIGURE 5.

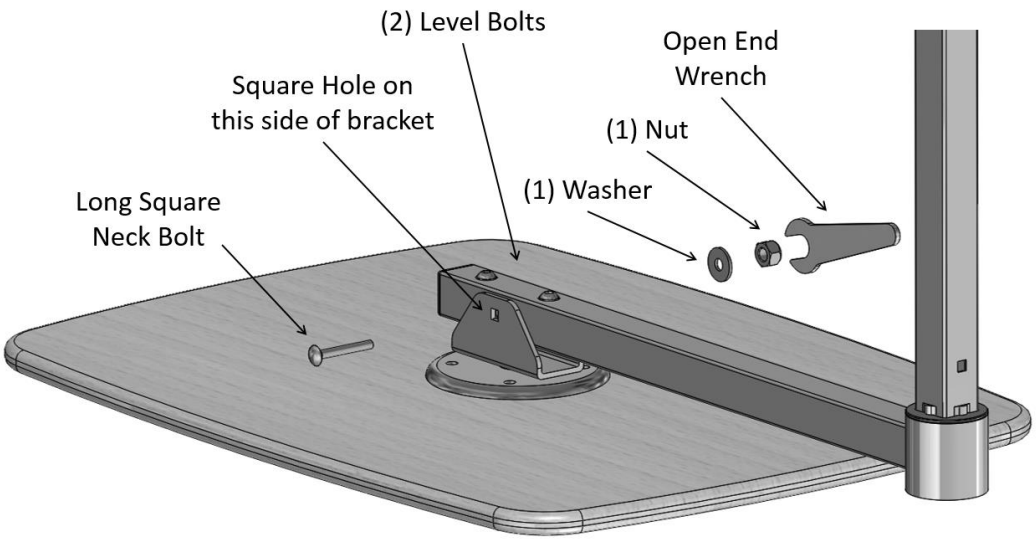

FIGURE 5

6. Depress the Spring Pin in the Tray Support Assembly and slide the Tray Support Assembly into the Upright Assembly. Allow the Spring Pin to engage any of the holes in the Upright Assembly as shown in FIGURE 6.

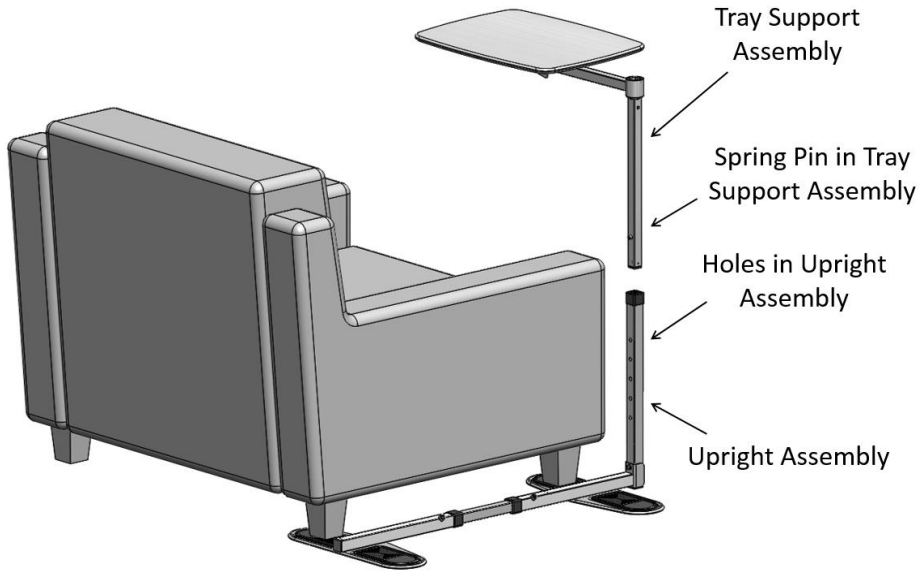

FIGURE 6

7. Adjust the Height of the Tray Support Assembly to pivot above the Furniture arm rest. **NOTE:** The Furniture legs can be positioned on either set of the Rubber foot pads as shown in FIGURE 7 and FIGURE 8.

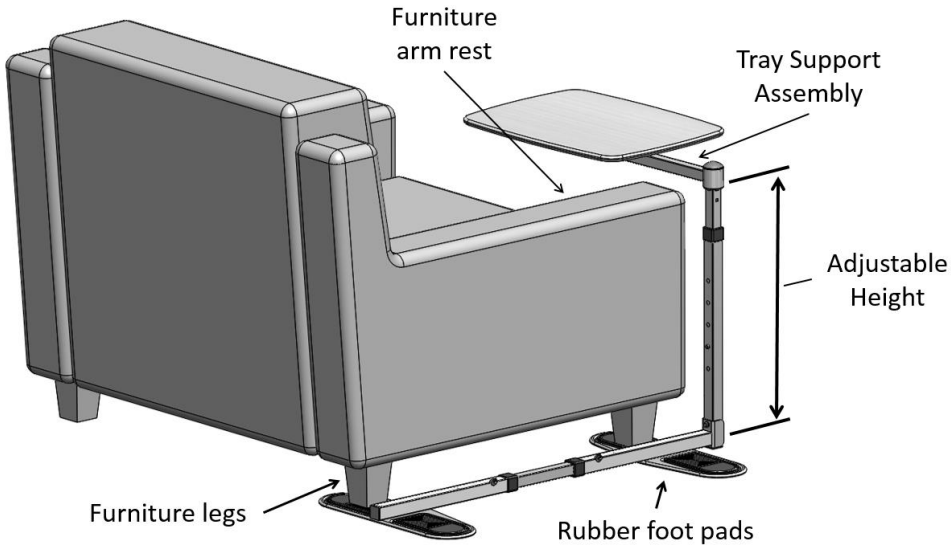

FIGURE 7

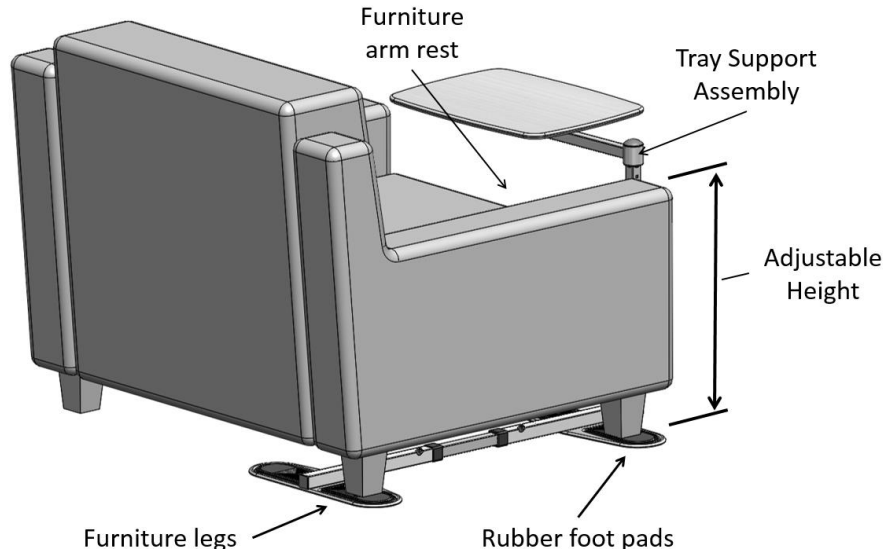

FIGURE 8

8. Attach the Handle Assembly to the Tray Support Assembly with the Small Allen Wrench, Female Nut, Short Square Neck Bolt as shown in Figure 9. **NOTE:** Short Square Neck Bolt must be inserted into the square hole of the Tray Support Assembly.

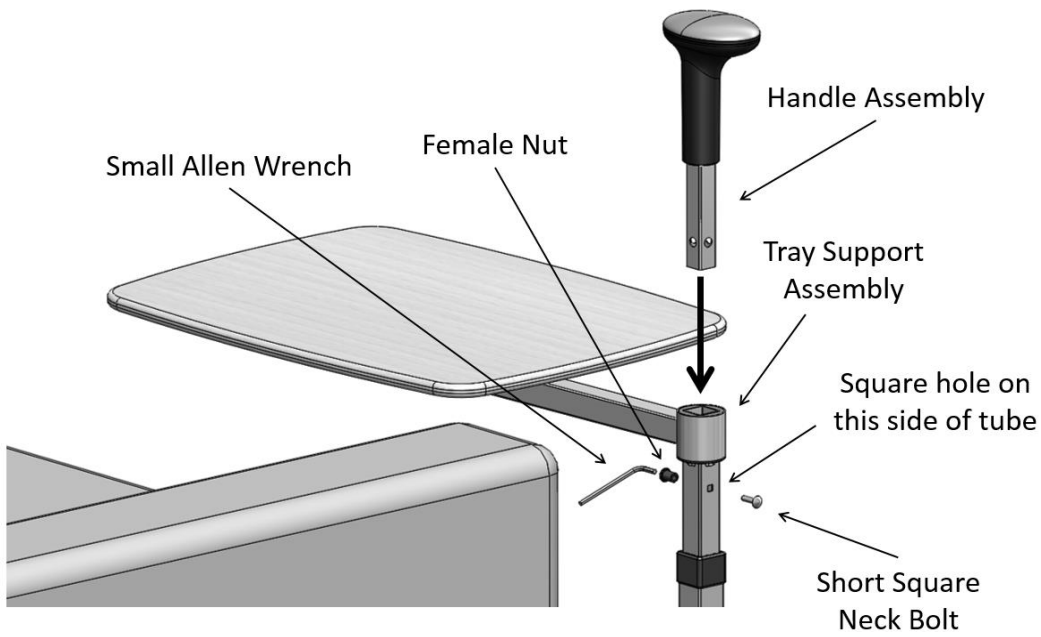

FIGURE 9

9. The Tray Assembly can be leveled by using the Small Allen Wrench. Loosen the leveling screw on the high side and then tighten the screw on the low side. When the Tray Assembly is level, tighten each screw equally as shown in FIGURE 10.

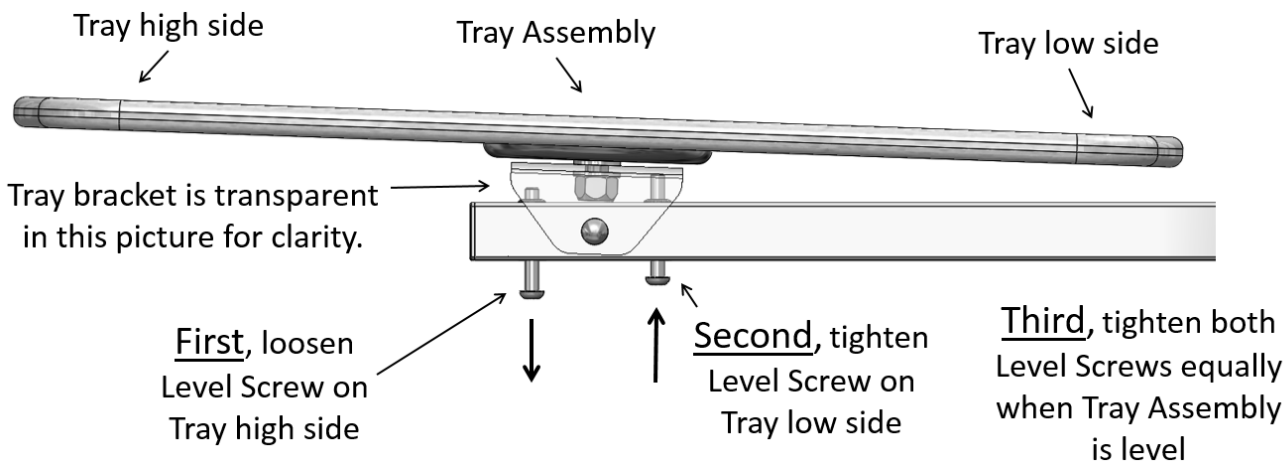

FIGURE 10

Instruction Sheet

Thank you for purchasing the support handle. Please read the following instructions for your safety and to learn of the features of this product.

1. Remove support handle cap by unscrewing the cap in a counter clockwise direction.

2. Insert the two AA-size batteries into the support handle with the positive side of the batteries pointing toward the cap of the support handle.

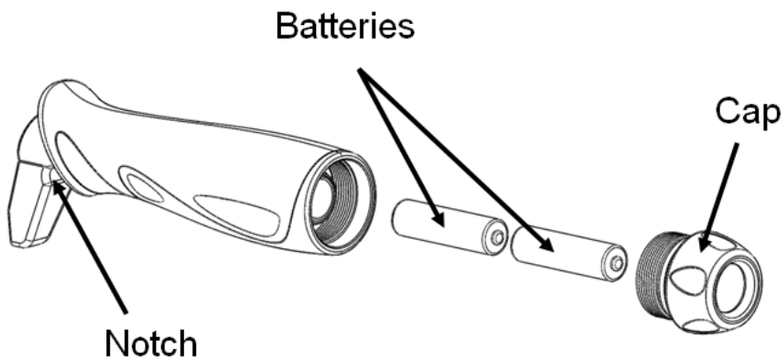

3. Replace the support handle cap by screwing the cap in a clockwise direction.

   NOTE: Screw the cap in a clockwise direction until the flashlight turns on and then unscrew the cap in a counter clockwise direction until the flashlight turns off (this should only be a few turns). This is how you turn the flashlight on and off. IF YOU DO NOT TURN FLASHLIGHT OFF, THE BATTERIES WILL DRAIN.

4. Install the support handle into your car door latch as shown in the pictures below.

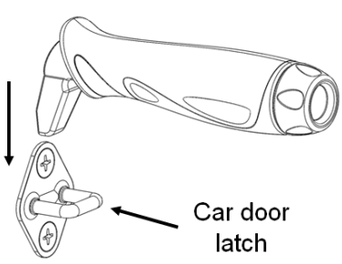

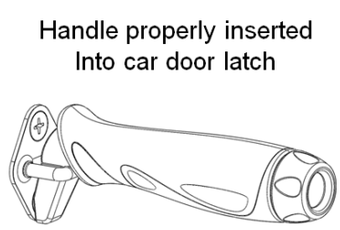

IMPORTANT: Do not attempt to insert the support handle into the car door latch in any other direction other than as shown in the above pictures. Failure to do so may cause injury and could possibly damage your car door latch. THE FLASHLIGHT SHOULD POINT TOWARD THE FRONT OF YOU CAR.

Notice the picture below represents the support handle and car door latch in a side view so you can see how the notch of the support handle is inserted into car door latch at the proper depth. This proper engagement is critical for your safety before applying any downward force on the handle.

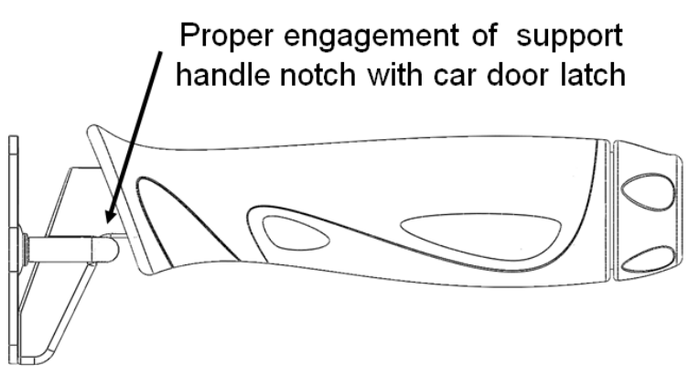

WARNING: Please read before using this product.

1. Serious injury or death can result if the support handle is not properly installed. Standers Inc. is committed to providing safe products and informing the user of ways to prevent accidents.

   SAFETY PRECAUTIONS:

   - ✓ Make sure the support handle is properly inserted into the car door latch. The support handle must be insert into the car door latch as far as possible before a downward force is exerted.
   - ✓ Additional safety measures should be taken for users that are a high risk. High risk users include those who are not mentally conscious (including those individuals under medication), users who have size or weight conditions, or any condition that impair their ability to use the support handle without assistance.
   - ✓ If you have any concerns or questions regarding these precautions, please contact Standers at:

     1-800-506-9901.

2. If you are suffering from an ailment or injury or are taking medications that affect your balance or ability to stand or sit down, you should first consult with a physician before using this product. If the product is not used properly, serious injury or harm could result.

3. The product was not intended to carry the full weight of an individual. This product is only intended to provide balance and support while sitting and standing.

4. The product instructions must be carefully followed to ensure that the product is properly assembled and positioned properly. Failure to follow the instructions could result in serious injury to the user(s) of the product.

5. Children should not be allowed to hang on or play with the product.

6. DISCLAIMER: Neither Standers, Inc. nor the manufacture is liable for any harm or injury that may result or has resulted from the improper use or assembly of the product.

Limited Warranty

Congratulations on your purchase of your Standers brand product. We hope that it will ease your daily living. Please read the following warranty statement for your protection.

Standers, Inc. warrants to the original purchaser that this product will be free from defects in material and/or workmanship for 1 year from the date of purchase.

During the warranty period, Standers, Inc. will correct any defects in material or workmanship, at no charge. The original purchaser, however, must prepay shipping cost. Any replacement parts will be new and are warranted for the remainder of the original warranty or thirty (30) days from the date of shipment, whichever is longer. The original purchaser must notify Standers, Inc. during the warranty period in writing of the defect in workmanship or material. This warranty is not transferable and covers only normal use. NO SHIPPING CHARGES ARE REFUNDABLE.

The warranty does NOT cover the following:

- Damage during shipment other than original shipment to retailer.
- Damage caused by unauthorized attachments, alterations, or modifications.
- Damage caused by the use of the product for purposes other than those for which the product was designed or intended.
- Damage caused by any other abuse, misuse, mishandling or misapplication.

Under no circumstances shall Standers, Inc. be liable for any special, incidental, or consequential damages based upon breach of this limited warranty, breach of contract, or strict liability.

THERE ARE NO WARRANTIES WHICH EXTEND BEYOND THE DESCRIPTION ON THEFACE HEREOF. ALL OTHER WARRANTIES, EXPRESS OR IMPLIED (INCLUDING ALL IMPLIED WARRANTIES OF MERCHANTABILITY OR FITNESS FOR A PARTICULAR PURPOSE), ARE HEREBY DISCLAIMED.

Some states do not allow limitations on how long an implied warranty lasts, so the above limitation may not apply to you. This warranty gives you specific legal right, and you may also have other rights, which vary from state to state.

To obtain service under this warranty, you can reach Standers Inc. at 1-800-506-9901.

EC REP
EMERGO EUROPE
Molenstraat 15
2513 BH, The Hague
The Netherlands
Tel: +31 (0)70 345 8570
Fax: +31 (0)70 346 7299

Please read assembly instructions, safety precautions, and limited warranty before assembling this product.

Assembly Instructions:

1. Remove all parts from the box at the location you will be using this product and lay them on a flat surface as shown in Figure 1.

   Each part is identified by an Item number (some Item numbers have multiple identical parts).

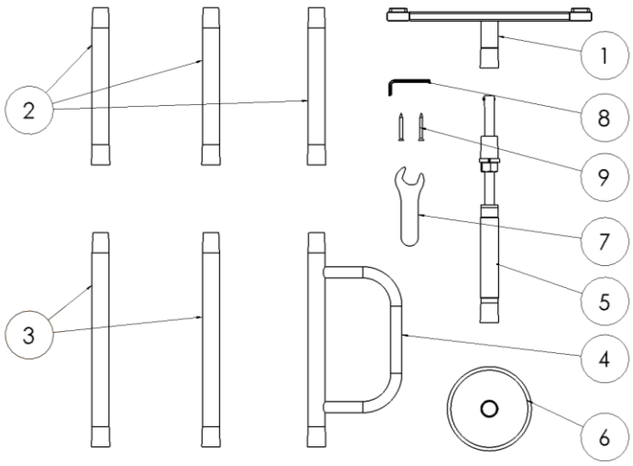

FIGURE 1

   NOTE: This product is designed to be used with ceiling heights that range from 7, 8, or 9 foot ceilings (not to be used on vaulted ceilings).

2. Figure 2 shows the parts that will be used for 7 foot, 8 foot, or 9 foot ceilings. Notice that the only difference between the 7 foot, 8 foot, or 9 foot assemblies is the quantity of part number 2 being used.

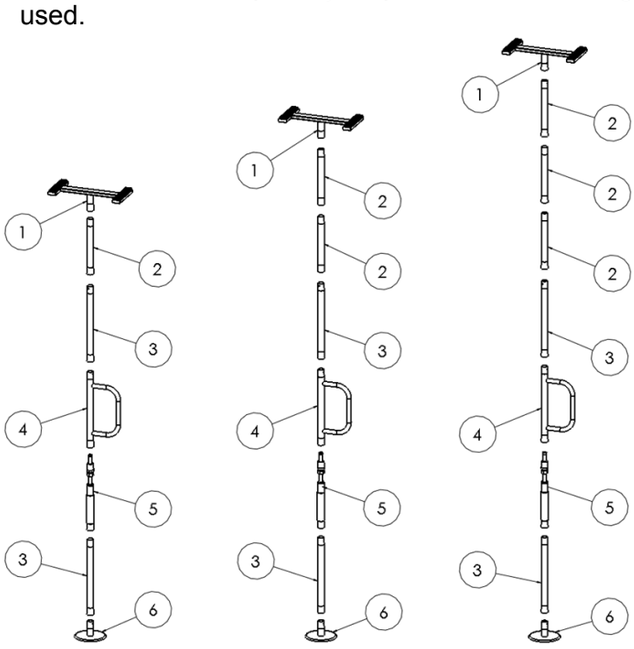

7 Foot Assembly 8 Foot Assembly 9 Foot Assembly

FIGURE 2

3. Each tubular part has either a tapered end and/or a flared end. When assembling the parts, the tapered end will always insert into a flared end of the joining part.
   NOTE: HOLES IN TAPERED OR FLARED ENDS OF TUBES ARE FOR MANUFACTURING PURPOSES AND ARE NOT USED FOR ASSEMBLY.

   CAUTION: When assembling parts (Items 1 through 6), it is best if another person can hold the pole in a vertical position to prevent loosely assembled parts from falling onto those assembling the product or onto the floor. Falling parts may cause injury or damage. If you do not feel comfortable assembling the product, please get additional assistance.

4. **NOTE:** For this step, just use one of the two Item-3 parts.
   Place Item-6 on the floor near the location you desire to place the pole and place the flared end of Item-3 onto the tapered end of Item-6.

5. Place the flared end of Item-5 onto the tapered end of Item-3.

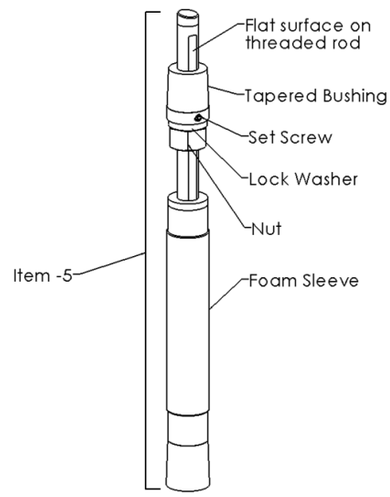

FIGURE 3

6. Place the flared end of Item-4 onto the tapered bushing of Item-5.

7. Place the flared end of the remaining Item-3 part onto the tapered end of Item-4.

8. Place the flared end of the one of the Item-2 parts onto the tapered end of Item-3.

9.
   a) If you have a 7 foot ceiling, then place the flared end of Item-1 onto the tapered end of Item-2.

   b) If you have an 8 foot ceiling, add one more Item-2 part before placing the flared end of Item-1 onto the tapered end of the second Item-2 part.

   c) If you have a 9 foot ceiling, then add all three Item-2 parts before placing the flared end of Item-1 onto the tapered end of the third Item-2 part.

10. Before securing the pole product between the floor and the ceiling, make sure the set screw is aligned with the flat surface on the threaded rod. **IMPORTANT:** Set screw should not be tightened at this point. The tapered bushing must be able to slide up and down the threaded rod. (See Figure 3)

11. For the assembled tubes to properly engage each other, secure the pole between the floor and the ceiling by tightening the nut on Item-5 with the included wrench (Item-7) until it is difficult to tighten any further.

12. **IMPORTANT:** Once the pole is secure, pull and push on the vertical member of Item-4 (creating flex in the pole) and then retighten the nut. Repeat this process until it becomes difficult to further tighten the nut. Keep the included wrench (Item-7) to periodically tighten the nut as needed to maintain a secure engagement of the pole between the floor and the ceiling.

13. If additional securing is needed, the 2 included screws can be installed through the holes in the Ceiling Support Assembly (Item-1) and into the ceiling joists (wood structural members located in the ceiling), as shown in Figure 4. This would require removing the plastic plugs from the holes in the Ceiling Support Assembly (Item-1).

    IMPORTANT: If the user decides not to use the screws, do not remove the plastic plugs from the holes in the Ceiling Support Assembly. The plastic plugs prevent moisture from getting inside of the steel tubing and causing rust.

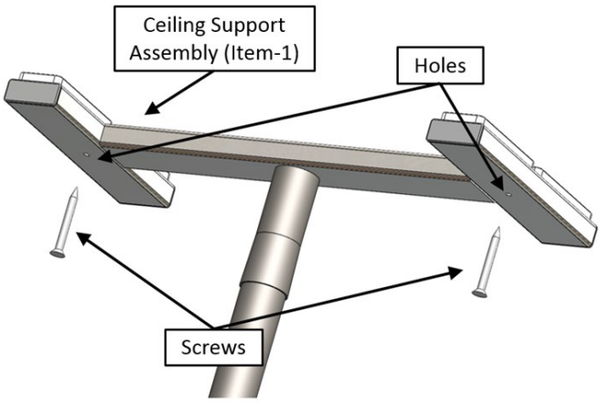

FIGURE 4

14. After pole is secured between the floor and the ceiling, use the Allen wrench (Item-8) to tighten the set screw against the flat surface of the threaded rod. (See Figure 3)

15. Slide foam sleeve upwards to cover the threaded rod and tapered bushing described in Figure 3.

NEED ASSISTANCE?

If your are experiencing problems or have any questions, please contact Stander Inc. at 1-800-506-9901

SAFETY PRECAUTIONS:

1. Serious injury or death can result if the pole is not properly installed. Stander Inc. is committed to providing safe products and informing the user of ways to prevent accidents.
    - ✓ Regularly check the pole to make sure the pole is tightly secured between the floor and ceiling.
    - ✓ Make sure the pole axis is installed at 90 degrees relative to the floor. All protective rubber pads must be in contact with the floor and the ceiling.
    - ✓ Additional safety measures should be taken for users that are a high risk. High risk users include those who are not mentally conscious (including those individuals under medication), users who have size or weight conditions, or any condition that impair their ability to use the pole without assistance.
    - ✓ If you have any concerns or questions regarding these precautions, please contact Stander Inc. at 1-800-506-9901.
2. If you are suffering from an ailment or injury or are taking medications that affect your balance or ability to stand or sit down, you should first consult with a physician before using this product. If the product is not used properly, serious injury or harm could result.
3. The product was not intended to carry the full weight of an individual. This product is only intended to provide balance and support while sitting and standing.
4. The product instructions must be carefully followed to ensure that the product is properly assembled and positioned. Failure to follow the instructions could result in serious injury to the user(s) of the product.
5. Children should not be allowed to hang on or play with the product.
6. DISCLAIMER: Neither Stander Inc. nor the manufacture is liable for any harm or injury that may result or has resulted from the improper use or assembly of the product.

LIMITED WARRANTY:

Congratulations on your purchase of your Able Life brand product from Stander Inc. We hope that it will ease your daily living. Please read the following warranty statement for your protection.

Stander Inc. warrants to the original purchaser that this product will be free from defects in material and/or workmanship for 1 year from the date of purchase.

During the warranty period, Stander Inc. will correct any defects in material or workmanship, at no charge. The original purchaser, however, must prepay shipping cost. Any replacement parts will be new and are warranted for the remainder of the original warranty or thirty (30) days from the date of shipment, whichever is longer. The original purchaser must notify Stander Inc. during the warranty period in writing of the defect in workmanship or material. This warranty is not transferable and covers only normal use. NO SHIPPING CHARGES ARE REFUNDABLE.

The warranty does NOT cover the following:

- Damage during shipment other than original shipment to retailer.
- Damage caused by unauthorized attachments, alterations, or modifications.
- Damage caused by the use of the product for purposes other than those for which the product was designed or intended.
- Damage caused by any other abuse, misuse, mishandling or misapplication.

Under no circumstances shall Stander Inc. be liable for any special, incidental, or consequential damages based upon breach of this limited warranty, breach of contract, or strict liability.

THERE ARE NO WARRANTIES WHICH EXTEND BEYOND THE DESCRIPTION ON THE FACE HEREOF. ALL OTHER WARRANTIES, EXPRESS OR IMPLIED (INCLUDING ALL IMPLIED WARRANTIES OF MERCHANTABILITY OR FITNESS FOR A PARTICULAR PURPOSE), ARE HEREBY DISCLAIMED.

Some states do not allow limitations on how long an implied warranty lasts, so the above limitation may not apply to you. This warranty gives you specific legal right, and you may also have other rights, which vary from state to state.

To obtain service under this warranty, you can reach Stander Inc. at 1-800-506-9901.

EC REP
EMERGO EUROPE
Molenstraat 15
2513 BH, The Hague
The Netherlands
Phone: +31.70.345.8570
Fax: +31.70.346.7299

ATTENTION

There is a potential risk of serious injury or death associated with virtually every product regardless of its type or intended use. Stander, Inc., has worked tirelessly to minimize all risks associated with its mobility aids, yet given the types of products, users, and a myriad of things outside of our control, we cannot eliminate every conceivable risk. Accordingly, a consumer must use common sense when utilizing our products and consider the user's overall physical and mental health.

Read all the materials that accompany this product before it is installed or used.

LIMITED WARRANTY

Stander, Inc. warrants to the original purchaser that this product will be free from defects in material and/or workmanship for 1 year from the date of purchase. During the warranty period we will correct any defects in material or workmanship at no charge. All shipping cost must be paid by the original purchaser. Any replacement parts will be new and are warranted for the remainder of the original warranty or thirty (30) days from the date of shipment, whichever is longer. The original purchaser must notify Stander, Inc. during the warranty period in writing of the defect in workmanship or material. This warranty is not transferable and covers only normal use. Stander will not refund or pay for any shipping charges. The warranty does NOT cover: (1) Damage during shipment other than original shipment to retailer; (2) Damage caused by unauthorized attachments, alterations, or modifications; (3) Damage caused using the product for purposes other than those for which the product was designed or intended; and (4) Damage caused by any other abuse, misuse, mishandling or misapplication.

Under no circumstances shall Stander, Inc. be liable for any special, incidental, or consequential damages based upon breach of this limited warranty, breach of contract, or strict liability.

THERE ARE NO WARRANTIES WHICH EXTEND BEYOND THOSE INDICATED HEREIN. ALL OTHER WARRANTIES, EXPRESS OR IMPLIED (INCLUDING ALL IMPLIED WARRANTIES OF MERCHANTABILITY OR FITNESS FOR A PARTICULAR PURPOSE), ARE HEREBY DISCLAIMED.

Some states do not allow limitations on how long an implied warranty lasts, so the above limitation may not apply to you. This warranty gives you specific legal right, and you may also have other rights which vary from state to state. To obtain service under this warranty, you can reach Stander, Inc. at (800) 506-9901 or (435) 755-0453.

WARNINGS

1) INSTALLATION:
   a) Do not use or install this product unless you read and understand these warnings and assembly instructions to ensure the product is properly installed and used. If installer/user(s) are installing this product in a nursing home, assisted living center, or a similar facility, follow these and the facility's Bed Rail installation policies. If you have any questions regarding the installation, use, associated risks, or anything at all regarding this product call Stander Inc. at (800) 506-9901 or (435) 755-0453.
   b) Improper installation of this product significantly increases the risk of entrapment (see section on ENTRAPMENT below). Do NOT install product without a bed frame under any circumstances. Do NOT use product without Safety Strap. Do not install this product if you are unable to follow the instruction exactly.
   c) This product should only be used with 8 inches to 16 inches thick innerspring or memory foam style mattresses. This product should not be used on any bed which consists of a material that may increase the potential for gapping between the top of the mattress and the bottom of the Bed Rail. Examples of beds that will cause gapping problems include, but are not limited to waterbeds, light weight foam, air or other lightweight mattresses, mattresses that compress more than 1" on the edge when in use, and beds with adjustable frames.
   d) Prior to use, ensure that there is no gap between the side of the Bed Rail and the side of the mattress. A gap in this area means the product was installed improperly. The included Safety Strap is designed to secure the Bed Rail to the side of a mattress to avoid a gap in this area.
   e) The product is equipped with a Safety Strap that is intended to reduce the risk of entrapment (see section on ENTRAPMENT below). ALWAYS use product with the Safety Strap. Removal, modification or alteration of the Safety Strap significantly increases the risk of entrapment.

2) ENTRAPMENT:
   a) There is a risk of entrapment associated with bed rails and other similar bedside mobility aids. Entrapment occurs when an individual becomes wedged between a bed rail and any other object. Entrapment has resulted in serious injury and death. Read the enclosed **Entrapment Prevention Guidelines** before installation or use of this product. Additional copies of the Entrapment Prevention Guidelines may be obtained from www.stander.com or by contacting a Stander representative at (800) 506-9901 or (435) 755-0453.

3) PHYSICAL AND MENTAL CONDITIONS:
   a) Individuals who have problems with physical limitations, paralysis, symptoms of dementia, Alzheimer's or memory loss, sleeping, incontinence, pain, uncontrolled body movement, getting out of bed and walk unsafely without assistance, frailty, weakness, confusion, restlessness, terminal restlessness, or are under the influence of medications, drugs or any substance that could impair their balance or judgment, or any other unforeseeable reasons that could affect the users physical and mental ability to safely use this product, are at a higher risk of entrapment. Since these conditions are subjective and Stander Inc. has no control who chooses to use this product, it is the installer/user(s) responsibility to consult a physician before using this product.
   b) This product is not intended to carry the full weight of an individual. This product is only intended to provide balance and support while sitting and standing.

4) EXTERNAL FACTORS:
   a) Children should not be allowed to hang on or play with this product.

b) Changing bed linens (bed covers, blankets, sheets, etc.) may require re-adjustment of the Safety Strap to eliminate a gap between the Bed Rail and side of the mattress.
c) If product is removed and reinstalled, Safety Strap needs to be reinstalled correctly as directed in these instructions.

5) AGREEMENT BETWEEN INSTALLER/USER(S) AND STANDER INC.:
a) If the installer/user(s) choose to use this product, it is understood between the installer/user(s) AND Stander Inc., that the installer/user(s) accept the risks associated with using this product. Since these conditions are subjective and Stander Inc. has no control over who chooses to use this product, the installer/user(s) agree to be liable for their decisions when using this product.

6) CONSUMER RIGHTS AND ARBITRATION AGREEMENT:
a) This arbitration agreement ("Agreement") affects your legal rights and remedies by providing that disputes between you and the manufacture of this product ("Stander"), must be resolved through binding arbitration, rather than in a court. Please read this agreement carefully as you accept the terms of this agreement by assembling and using this product. If you do not agree to the terms of this agreement, return the product to the location of purchase for a refund.
i) RESOLUTION OF CLAIMS OR DISPUTES. Any claim or dispute between you and Stander arising out of or relating in any way to the Product or this Agreement shall be resolved through final, binding arbitration. This arbitration obligation applies regardless of whether the claim or dispute involves a tort, fraud, misrepresentation, product liability, negligence, violation of a statute, or any other legal theory. Both you and Stander specifically acknowledge and agree that you waive your right to bring a lawsuit based on such claims or disputes and to have such lawsuit resolved by a judge or jury.
ii) LIMITATION OF LEGAL REMEDIES. All arbitrations under this Agreement shall be conducted only on an individual (and not a class-wide) basis and an arbitrator shall have no authority to award class-wide relief. You acknowledge and agree that this Agreement specifically prohibits you from commencing arbitration proceedings as a representative of others or joining in any arbitration proceedings brought by any other person.
iii) ARBITRATION PROCEDURES.
(1) Before commencing any arbitration proceedings under this Agreement, you must first present the claim/dispute to Stander by calling (800) 506-9901 or (435) 755-0453, providing requested contact information and allowing Stander the opportunity to resolve it. If your claim or dispute is not resolved within sixty (60) days, you may commence arbitration proceedings in accordance with the terms of this Agreement.
(2) The arbitration of claim(s)/dispute(s) under this Agreement shall be pursuant to the American Arbitration Association's ("AAA") United States Commercial Dispute Resolution Procedures and Supplementary Procedures for Consumer-Related Disputes (see www.adr.org for their rules and procedures).
(3) The arbitration of any claim/dispute under this Agreement shall be in the State of Utah.
(4) All administrative expenses of arbitration proceedings under this Agreement shall be divided equally between you and the Company, except that: (a) if the claims/dispute subject to the arbitration proceedings is less than ten thousand dollars (US$10,000), you will be responsible for no more than one hundred twenty-five dollars (US$125) in administrative expenses; (b) if the claim/dispute subject to the arbitration proceedings is more than ten thousand dollars (US$10,000) but less than seventy-five thousand dollars (US$75,000), then you will be responsible for no more than three hundred seventy-five dollars (US$375) in administrative expenses; and (c) if the claim/dispute subject to the arbitration proceedings is more than seventy-five thousand dollars (US$75,000), then you will be responsible for administrative expenses in accordance with the Commercial Fee Schedule provided by the AAA. You acknowledge and agree that each party shall pay the fees and costs of its own counsel, experts and witnesses.
iv) CHOICE OF LAW & SEVERABILITY. This Agreement shall be governed by the United States Federal Arbitration Act and the laws of the state of Utah. If any provision of this Agreement is declared or found to be unlawful, unenforceable or void, such provision will be ineffective only to the extent that it is found unlawful, unenforceable or void and the remainder shall remain fully enforceable.

⚠ WARNING
ENTRAPMENT AND FALL HAZARD

Gaps in and around this product can entrap and kill. People with Alzheimer's disease or dementia, or those who are sedated, confused, or frail, are at increased risk of entrapment. People attempting to climb over this product are at increased risk of injury or death from falls. Always make sure this product is properly secured to bed. If product can move away from bed or mattress, it can lead to entrapment and death.

⚠WARNING
SUFFOCATION AND STRANGULATION HAZARD

Gaps in and around this product can entrap and kill. People with Alzheimer's disease or dementia, or those who are sedated, confused, or frail, are at increased risk of entrapment.

- NEVER use unless product is tight against mattress, without gaps, and at least 12 ½" from headboard and footboard.
- NEVER use with children.
- NEVER use on toddler, bunk, water, or inflatable beds

EC REP
EMERGO EUROPE
Molenstraat 15
2513 BH, The Hague
The Netherlands
Tel: +31 (0)70 345 8570
Fax: +31 (0)70 346 7299

Instructions:

1. Remove all components from the box and become familiar with the items as shown in Figure 1.

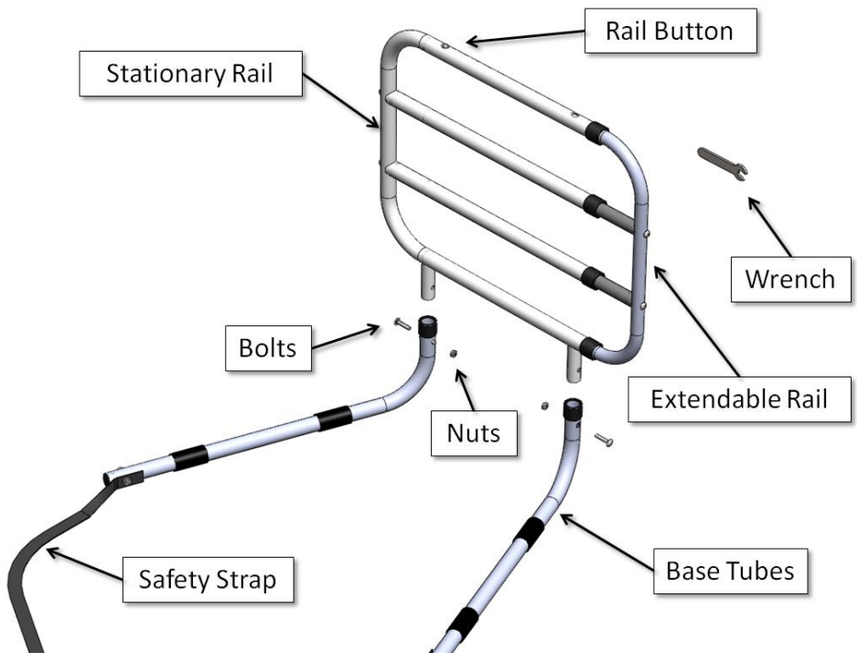

Figure 1

2. **IMPORTANT:** **<u>The Base Tubes can be assembled 2 different ways depending on which side the bed the product will be used.</u>** Determine which side of the bed you will be installing the product as shown in Figure 2 and then attach the Base Tubes as shown in Figure 3.

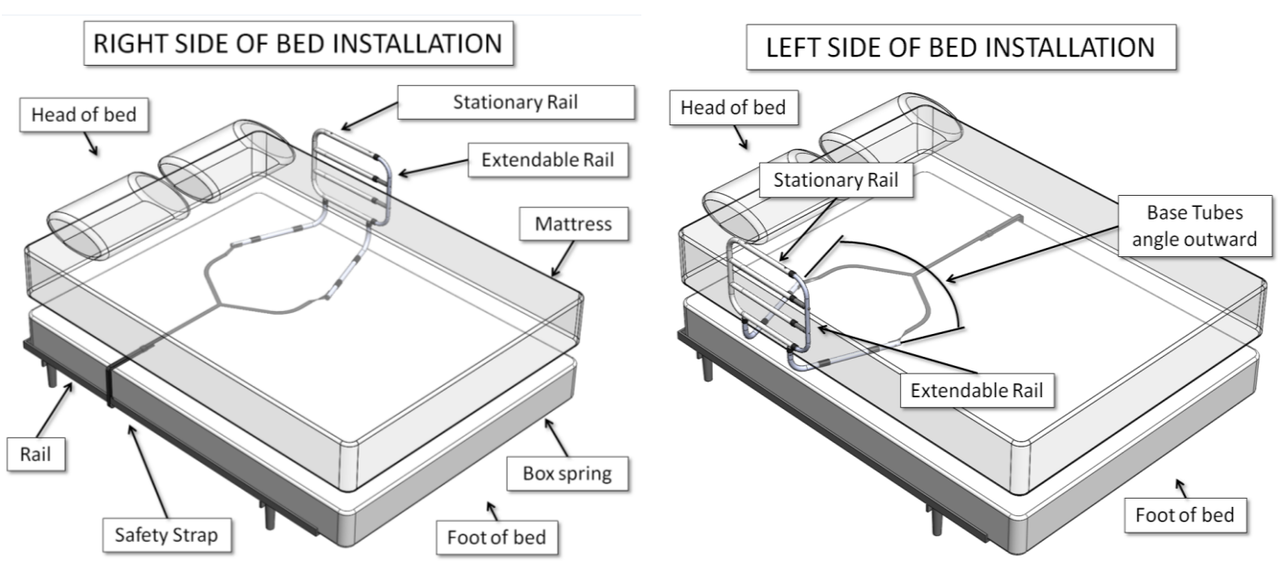

Figure 2

2. **IMPORTANT:** Before attaching the Base Tubes, note that the <u>Base Tubes are different from each other</u>:

- Holes (that the Bolts go through in the Base Tubes), are angled differently from each other.
- Each of the Base Tubes have both a square hole and a round hole.
- When assembled, the Base Tubes are angled outward as seen in Figure 2.
- Square holes on the Base Tubes should be facing outward and round holes should be facing inward.
- Bolts are inserted into the square holes and exit through the round holes as shown in Figure 3.

Using the included Open-End Wrench, insert Bottom Rail into the Base Tubes and secure with Carriage Bolts and Lock Nuts as shown in Figure 3.

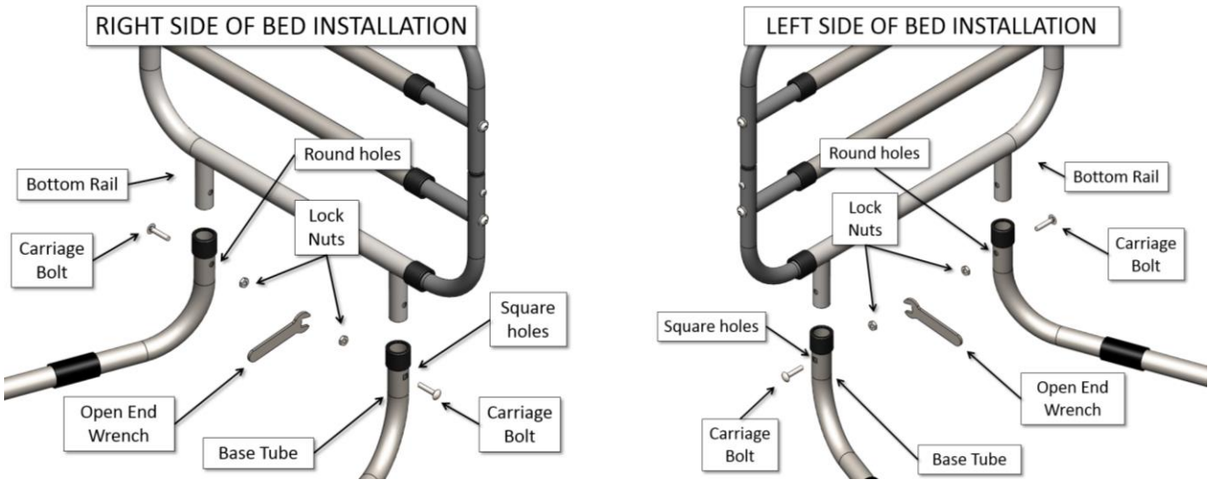

Figure 3

3. **Entrapment Warning:** Place product "between the mattress and box spring of the bed and secure the SAFETY STRAP to the bed frame, as shown in Figure 4. Unbuckle strap and loop strap around bed frame and re-buckle. Tighten strap to secure Handle Assembly against the side of the mattress. Do NOT install product without securing the SAFETY STRAP to the bed frame as shown in Figure 4. If you have any questions, call Stander at (800) 506-9901 or (435) 755-0453.

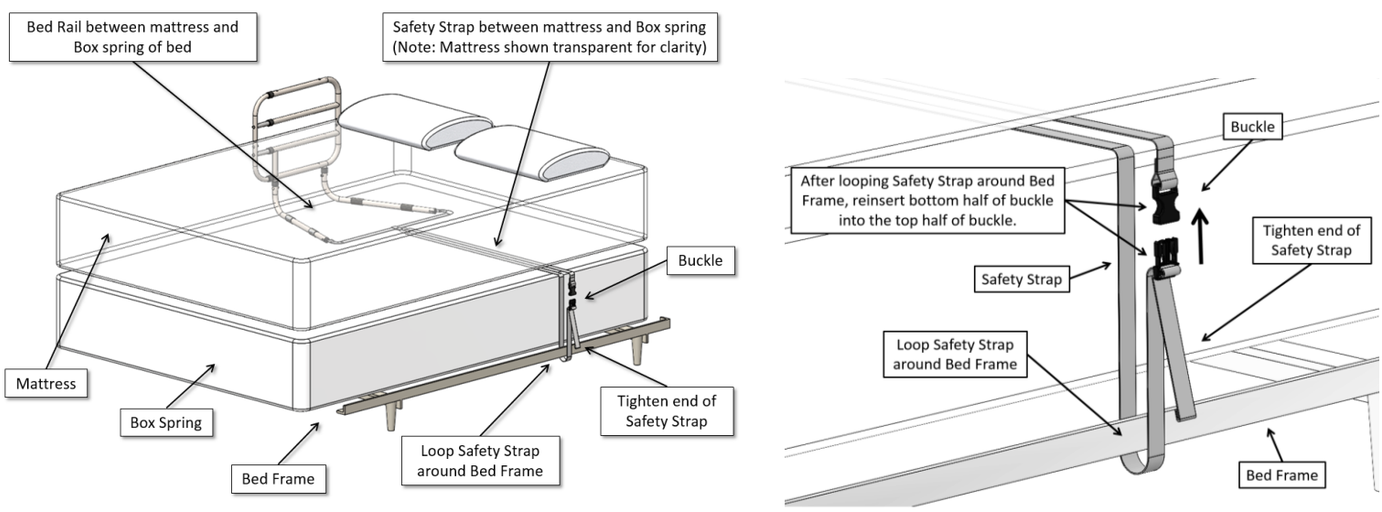

Figure 4

3. **Entrapment Warning:** Keep the product 12.5 inches from the head end of the bed to help prevent entrapment issues (see the **Entrapment Prevention Guidelines** sheet provide with these instructions). Also, keeping the Handle height 4 inches or more above the top of the mattress helps prevent user(s) from climbing over the product as shown in Figure 5.

4. It is important that the Bedrail is secured to the Side of the mattress. The Safety Strap is looped around the Bed Frame on the opposite side of the bed, buckled, and tightened as show in Figure 6.

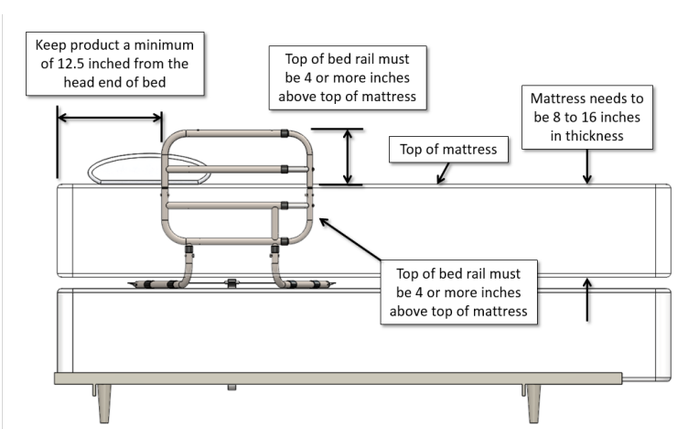

FIGURE 5

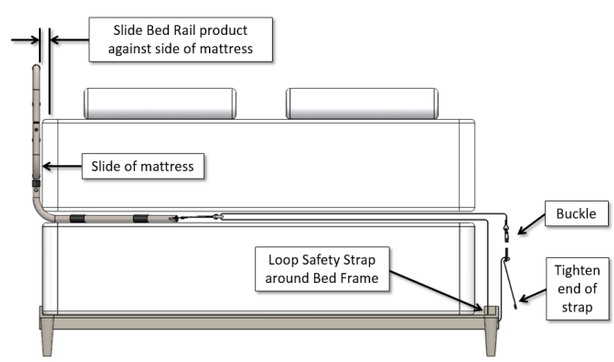

FIGURE 6

NOTES:

- PUSH Rail Button to extend bed rail (see Figure 1).
- The stationary side is always closest to the head of the bed and the extendable side is always closest to the foot of the bed.